Appendix B

MATERIAL PROPERTIES

For selected engineering materials. Many other alloys are available.

The following tables contain approximate values for strengths and other specifications of a variety of engineering materials compiled from various sources. In some cases the data are minimum recommended values and in other cases are data from a single test specimen. These data are suitable for use in the engineering exercises contained in this text but should not be considered as statistically valid representations of specifications for any particular alloy or material. The designer should consult the materials' manufacturers for more accurate and up-to-date strength information on materials used in engineering applications or conduct independent tests of the selected materials to determine their ultimate suitability to any application.

Table No.	Description
B-1	Physical Properties of Some Engineering Materials
B-2	Mechanical Properties for Some Wrought-Aluminum Alloys
B-3	Mechanical Properties for Some Carbon Steels
B-4	Mechanical Properties for Some Cast-Iron Alloys
B-5	Mechanical Properties for Some Engineering Plastics

Table B-1 Physical Properties of Some Engineering Materials

Data from Various Sources.* These Properties are Essentially Similar for All Alloys of the Particular Material

Material	Modulus of Elasticity E		Modulus of Rigidity G		Poisson's Ratio ν	Weight Density γ	Mass Density ρ	Specific Gravity
	Mpsi	GPa	Mpsi	GPa		lb/in^3	Mg/m^3	
Aluminum Alloys	10.4	71.7	3.9	26.8	0.34	0.10	2.8	2.8
Beryllium Copper	18.5	127.6	7.2	49.4	0.29	0.30	8.3	8.3
Brass, Bronze	16.0	110.3	6.0	41.5	0.33	0.31	8.6	8.6
Copper	17.5	120.7	6.5	44.7	0.35	0.32	8.9	8.9
Iron, Cast, Gray	15.0	103.4	5.9	40.4	0.28	0.26	7.2	7.2
Iron, Cast, Ductile	24.5	168.9	9.4	65.0	0.30	0.25	6.9	6.9
Iron, Cast, Malleable	25.0	172.4	9.6	66.3	0.30	0.26	7.3	7.3
Magnesium Alloys	6.5	44.8	2.4	16.8	0.33	0.07	1.8	1.8
Nickel Alloys	30.0	206.8	11.5	79.6	0.30	0.30	8.3	8.3
Steel, Carbon	30.0	206.8	11.7	80.8	0.28	0.28	7.8	7.8
Steel, Alloys	30.0	206.8	11.7	80.8	0.28	0.28	7.8	7.8
Steel, Stainless	27.5	189.6	10.7	74.1	0.28	0.28	7.8	7.8
Titanium Alloys	16.5	113.8	6.2	42.4	0.34	0.16	4.4	4.4
Zinc Alloys	12.0	82.7	4.5	31.1	0.33	0.24	6.6	6.6

* *Properties of Some Metals and Alloys,* International Nickel Co., Inc., NY; *Metals Handbook,* American Society for Metals, Materials Park, OH.

Table B-2 Mechanical Properties for Some Wrought-Aluminum Alloys

Data from Various Sources.* Approximate Values. Consult Manufacturers for More Accurate Information

Wrought-Aluminum Alloy	Condition	Tensile Yield Strength (2% offset)		Ultimate Tensile Strength		Fatigue Strength at 5E8 cycles		Elongation over 2 in	Brinell Hardness
		kpsi	MPa	kpsi	MPa	kpsi	MPa	%	-HB
1100	Sheet annealed	5	34	13	90			35	23
	Cold rolled	22	152	24	165			5	44
2024	Sheet annealed	11	76	26	179			20	-
	Heat treated	42	290	64	441	20	138	19	-
3003	Sheet annealed	6	41	16	110			30	28
	Cold rolled	27	186	29	200			4	55
5052	Sheet annealed	13	90	28	193			25	47
	Cold rolled	37	255	42	290			7	77
6061	Sheet annealed	8	55	18	124			25	30
	Heat treated	40	276	45	310	14	97	12	95
7075	Bar annealed	15	103	33	228			16	60
	Heat treated	73	503	83	572	14	97	11	150

* *Properties of Some Metals and Alloys,* International Nickel Co., Inc., NY; *Metals Handbook,* American Society for Metals, Materials Park, OH.

Table B-3 Mechanical Properties for Some Carbon Steels

Data from Various Sources.* Approximate Values. Consult Manufacturers for More Accurate Information

SAE / AISI Number	Condition	Tensile Yield Strength (2% offset)		Ultimate Tensile Strength		Elongation over 2 in	Brinell Hardness
		kpsi	MPa	kpsi	MPa	%	-HB
1010	Hot rolled	26	179	47	324	28	95
	Cold rolled	44	303	53	365	20	105
1020	Hot rolled	30	207	55	379	25	111
	Cold rolled	57	393	68	469	15	131
1030	Hot rolled	38	259	68	469	20	137
	Normalized @ 1650°F	50	345	75	517	32	149
	Cold rolled	64	441	76	524	12	149
	Q&T @ 1000°F	75	517	97	669	28	255
	Q&T @ 800°F	84	579	106	731	23	302
	Q&T @ 400°F	94	648	123	848	17	495
1035	Hot rolled	40	276	72	496	18	143
	Cold rolled	67	462	80	552	12	163
1040	Hot rolled	42	290	76	524	18	149
	Normalized @ 1650°F	54	372	86	593	28	170
	Cold rolled	71	490	85	586	12	170
	Q&T @ 1200°F	63	434	92	634	29	192
	Q&T @ 800°F	80	552	110	758	21	241
	Q&T @ 400°F	86	593	113	779	19	262
1045	Hot rolled	45	310	82	565	16	163
	Cold rolled	77	531	91	627	12	179
1050	Hot rolled	50	345	90	621	15	179
	Normalized @ 1650°F	62	427	108	745	20	217
	Cold rolled	84	579	100	689	10	197
	Q&T @ 1200°F	78	538	104	717	28	235
	Q&T @ 800°F	115	793	158	1 089	13	444
	Q&T @ 400°F	117	807	163	1 124	9	514
1060	Hot rolled	54	372	98	676	12	200
	Normalized @ 1650°F	61	421	112	772	18	229
	Q&T @ 1200°F	76	524	116	800	23	229
	Q&T @ 1000°F	97	669	140	965	17	277
	Q&T @ 800°F	111	765	156	1 076	14	311
1095	Hot rolled	66	455	120	827	10	248
	Normalized @ 1650°F	72	496	147	1 014	9	13
	Q&T @ 1200°F	80	552	130	896	21	269
	Q&T @ 800°F	112	772	176	1 213	12	363
	Q&T @ 600°F	118	814	183	1 262	10	375

* *SAE Handbook*, Society of Automotive Engineers, Warrendale PA; *Metals Handbook*, American Society for Metals, Materials Park, OH.

Table B-4 Mechanical Properties of Some Cast-Iron Alloys

Data from Various Sources.* Approximate Values. Consult Manufacturers for More Accurate Information

Cast-Iron Alloy	Condition	Tensile Yield Strength (2% offset)		Ultimate Tensile Strength		Compressive Strength		Brinell Hardness
		kpsi	MPa	kpsi	MPa	kpsi	MPa	HB
Gray Cast Iron—Class 20	As cast	–	–	22	152	83	572	156
Gray Cast Iron—Class 30	As cast	–	–	32	221	109	752	210
Gray Cast Iron—Class 40	As cast	–	–	42	290	140	965	235
Gray Cast Iron—Class 50	As cast	–	–	52	359	164	1 131	262
Gray Cast Iron—Class 60	As cast	–	–	62	427	187	1 289	302
Ductile Iron 60-40-18	Annealed	47	324	65	448	52	359	160
Ductile Iron 65-45-12	Annealed	48	331	67	462	53	365	174
Ductile Iron 80-55-06	Annealed	53	365	82	565	56	386	228
Ductile Iron 120-90-02	Q & T	120	827	140	965	134	924	325

* *Properties of Some Metals and Alloys*, International Nickel Co., Inc., NY; *Metals Handbook*, American Society for Metals, Materials Park, OH.

Table B-5 Properties of Some Engineering Plastics

Data from Various Sources.* Approximate Values. Consult Manufacturers for More Accurate Information

Material	Approximate Modulus of Elasticity E †		Ultimate Tensile Strength		Ultimate Compressive Strength		Elongation over 2 in	Max Temp	Specific Gravity
	Mpsi	GPa	kpsi	MPa	kpsi	MPa	%	°F	
ABS	0.3	2.1	6.0	41.4	10.0	68.9	5-25	160-200	1.05
20-40% glass filled	0.6	4.1	10.0	68.9	12.0	82.7	3	200-230	1.30
Acetal	0.5	3.4	8.8	60.7	18.0	124.1	60	220	1.41
20-30% glass filled	1.0	6.9	10.0	68.9	18.0	124.1	7	185-220	1.56
Acrylic	0.4	2.8	10.0	68.9	15.0	103.4	5	140-190	1.18
Fluoroplastic (PTFE)	0.2	1.4	5.0	34.5	6.0	41.4	100	350-330	2.10
Nylon 6/6	0.2	1.4	10.0	68.9	10.0	68.9	60	180-300	1.14
Nylon 11	0.2	1.3	8.0	55.2	8.0	55.2	300	180-300	1.04
20-30% glass filled	0.4	2.5	12.8	88.3	12.8	88.3	4	250-340	1.26
Polycarbonate	0.4	2.4	9.0	62.1	12.0	82.7	100	250	1.20
10-40% glass filled	1.0	6.9	17.0	117.2	17.0	117.2	2	275	1.35
HMW Polyethylene	0.1	0.7	2.5	17.2	–	–	525	–	0.94
Polyphenylene Oxide	0.4	2.4	9.6	66.2	16.4	113.1	20	212	1.06
20-30% glass filled	1.1	7.8	15.5	106.9	17.5	120.7	5	260	1.23
Polypropylene	0.2	1.4	5.0	34.5	7.0	48.3	500	250-320	0.90
20-30% glass filled	0.7	4.8	7.5	51.7	6.2	42.7	2	300-320	1.10
Impact Polystryrene	0.3	2.1	4.0	27.6	6.0	41.4	2-80	140-175	1.07
20-30% glass filled	0.1	0.7	12.0	82.7	16.0	110.3	1	180-200	1.25
Polysulfone	0.4	2.5	10.2	70.3	13.9	95.8	50	300-345	1.24

* *Modern Plastics Encyclopedia*, McGraw-Hill, New York; *Machine Design Materials Reference Issue*, Penton Publishing, Cleveland, OH.

† Most plastics do not obey Hooke's Law. These apparent moduli of elasticity vary with time and temperature.

Appendix C

GEOMETRIC PROPERTIES

DIAGRAMS AND FORMULAS TO CALCULATE THE FOLLOWING PARAMETERS FOR SEVERAL COMMON GEOMETRIC SOLIDS

V = volume

m = mass

C_g = location of center of mass

I_x = second moment of mass about x axis $= \int \left(y^2 + z^2\right) dm$

I_y = second moment of mass about y axis $= \int \left(x^2 + z^2\right) dm$

I_z = second moment of mass about z axis $= \int \left(x^2 + y^2\right) dm$

k_x = radius of gyration about x axis

k_y = radius of gyration about y axis

k_z = radius of gyration about z axis

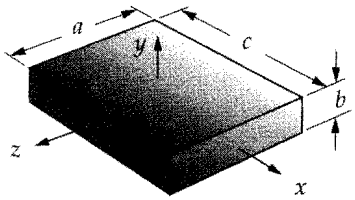

(a) Rectangular prism

$V = abc$ $\quad m = V \cdot$ mass density

x_{Cg} @ $\frac{c}{2}$ $\quad y_{Cg}$ @ $\frac{b}{2}$ $\quad z_{Cg}$ @ $\frac{a}{2}$

$I_x = \frac{m(a^2+b^2)}{12}$ $\quad I_y = \frac{m(a^2+c^2)}{12}$ $\quad I_z = \frac{m(b^2+c^2)}{12}$

$k_x = \sqrt{\frac{I_x}{m}}$ $\quad k_y = \sqrt{\frac{I_y}{m}}$ $\quad k_z = \sqrt{\frac{I_z}{m}}$

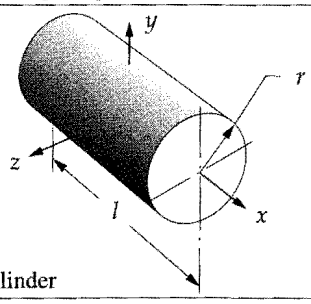

(b) Cylinder

$V = \pi r^2 l$ $\quad m = V \cdot$ mass density

x_{Cg} @ $\frac{l}{2}$ $\quad y_{Cg}$ on axis $\quad z_{Cg}$ on axis

$I_x = \frac{mr^2}{2}$ $\quad I_y = I_z = \frac{m(3r^2+l^2)}{12}$

$k_x = \sqrt{\frac{I_x}{m}}$ $\quad k_y = k_z = \sqrt{\frac{I_y}{m}}$

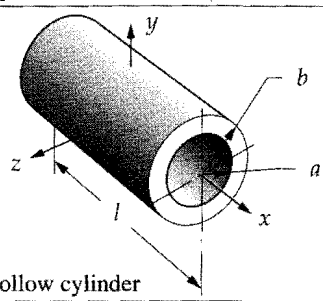

(c) Hollow cylinder

$V = \pi(b^2 - a^2)l$ $\quad m = V \cdot$ mass density

x_{Cg} @ $\frac{l}{2}$ $\quad y_{Cg}$ on axis $\quad z_{Cg}$ on axis

$I_x = \frac{m(a^2+b^2)}{2}$ $\quad I_y = I_z = \frac{m(3a^2+3b^2+l^2)}{12}$

$k_x = \sqrt{\frac{I_x}{m}}$ $\quad k_y = k_z = \sqrt{\frac{I_y}{m}}$

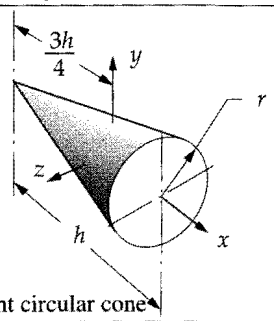

(d) Right circular cone

$V = \pi \frac{r^2 h}{3}$ $\quad m = V \cdot$ mass density

x_{Cg} @ $\frac{3h}{4}$ $\quad y_{Cg}$ on axis $\quad z_{Cg}$ on axis

$I_x = \frac{3}{10} mr^2$ $\quad I_y = I_z = \frac{m(12r^2+3h^2)}{80}$

$k_x = \sqrt{\frac{I_x}{m}}$ $\quad k_y = k_z = \sqrt{\frac{I_y}{m}}$

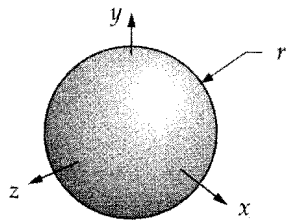

(e) Sphere

$V = \frac{4}{3}\pi r^3$ $\quad m = V \cdot$ mass density

x_{Cg} at center $\quad y_{Cg}$ at center $\quad z_{Cg}$ at center

$I_x = I_y = I_z = \frac{2}{5} mr^2$

$k_x = k_y = k_z = \sqrt{\frac{I_y}{m}}$

Appendix D

SPRING DATA

The following catalog pages of helical compression and extension spring data provided courtesy of *Hardware Products Co., Chelsea, Massachusetts.*

COMPRESSION SPRINGS

Will go in hole In.		7/16			1/2				5/8				3/4				7/8			
Wire Dia. In.		.031	.047	.062	.047	.062	.078	.094	.047	.062	.078	.094	.062	.078	.094	.125	.062	.078	.094	.125
FREE LENGTHS 7/16	Catalog No.	247	248	249																
	Price Code	HB	HB	HC																
	lbs./in.	12	55	180																
	Max. Defl.	.32	.23	.16																
1/2	Catalog No.	250	251	252	283	284	285	286												
	Price Code	HB	HB	HC	HB	HB	HE	HE												
	lbs./in.	10	47	150	37	110	320	840												
	Max. Defl.	.37	.27	.19	.29	.22	.15	.10												
5/8	Catalog No.	253	254	255	287	288	289	290	331	332	333	334								
	Price Code	HB	HB	HC	HB	HB	HE	HE	HB	HB	HD	HE								
	lbs./in.	7.9	36	175	29	85	240	610	20	54	140	320								
	Max. Defl.	.47	.35	.25	.38	.29	.20	.14	.43	.35	.27	.20								
3/4	Catalog No.	256	257	258	291	292	293	294	335	336	337	338	375	376	377	378				
	Price Code	HB	HB	HC	HB	HB	HE	HE	HB	HB	HD	HE	HD	HD	HF	HG				
	lbs./in.	6.4	29	90	23	68	185	470	16	43	105	250	32	78	170	650				
	Max. Defl.	.58	.44	.32	.48	.37	.26	.18	.53	.44	.34	.26	.59	.40	.32	.19				
7/8	Catalog No.	259	260	261	295	296	297	298	339	340	341	342	379	380	381	382	419	420	421	422
	Price Code	HB	HB	HC	HB	HB	HE	HE	HB	HB	HD	HE	HD	HD	HF	HG	HF	HF	HJ	HK
	lbs./in.	5.4	24	75	19	56	155	384	13	36	90	204	27	65	140	520	21	49	100	350
	Max. Defl.	.68	.52	.39	.57	.44	.32	.23	.64	.53	.42	.32	.58	.48	.39	.24	.62	.53	.44	.30
1	Catalog No.	262	263	264	299	300	301	302	343	344	345	346	383	384	385	386	423	424	425	426
	Price Code	HB	HB	HC	HB	HC	HE	HE	HB	HC	HD	HE	HD	HD	HF	HG	HF	HF	HJ	HK
	lbs./in.	4.7	21	65	17	48	130	320	11	31	77	170	23	55	115	430	18	42	86	290
	Max. Defl.	.79	.60	.45	.66	.51	.37	.27	.74	.62	.49	.38	.68	.57	.46	.29	.73	.63	.53	.36
1¼	Catalog No.	265	266	267	303	304	305	306	347	348	349	350	387	388	389	390	427	428	429	430
	Price Code	HB	HC	HC	HC	HC	HF	HF	HC	HC	HD	HE	HE	HE	HF	HG	HG	HG	HJ	HK
	lbs./in.	3.7	16	50	13	38	100	245	9.0	24	59	130	18	42	89	320	14	32	66	220
	Max. Defl.	1.0	.77	.58	.84	.66	.49	.35	.94	.80	.64	.49	.88	.74	.60	.39	.94	.81	.69	.47
1½	Catalog No.	268	269	270	307	308	309	310	351	352	353	354	391	392	393	394	431	432	433	434
	Price Code	HB	HC	HC	HC	HC	HF	HF	HD	HD	HE	HF	HE	HE	HF	HG	HG	HG	HJ	HK
	lbs./in.	3.1	14	41	11	31	83	200	7.4	20	48	105	15	34	72	260	12	26	53	175
	Max. Defl.	1.2	.94	.70	1.0	.81	.60	.43	1.1	.98	.78	.61	1.1	.91	.74	.48	1.1	1.0	.85	.59
1¾	Catalog No.	271	272	273	311	312	313	314	355	356	357	358	395	396	397	398	435	436	437	438
	Price Code	HC	HD	HE	HC	HD	HF	HF	HD	HD	HC	HF	HE	HE	HF	HG	HG	HG	HJ	HK
	lbs./in.	2.6	11	35	9.1	26	70	170	6.2	17	41	90	12.4	29	61	216	9.9	22	45	147
	Max. Defl.	1.4	1.1	.84	1.2	.96	.71	.52	1.3	1.1	.93	.73	1.3	1.1	.89	.58	1.35	1.2	1.0	.71
2	Catalog No.	274	275	276	315	316	317	318	359	360	361	362	399	400	401	402	439	440	441	442
	Price Code	HD	HD	HE	HC	HD	HF	HF	HD	HD	HE	HF	HE	HE	HF	HG	HG	HG	HJ	HL
	lbs./in.	2.3	10	30	7.9	23	60	145	5.4	14	35	77	11	25	52	185	8.6	19	38	125
	Max. Defl.	1.6	1.3	.96	1.4	1.1	.82	.60	1.5	1.3	1.1	.85	1.4	1.2	1.0	.68	1.5	1.4	1.2	.83
3	Catalog No.	277	278	279	319	320	321	322	363	364	365	366	403	404	405	406	443	444	445	446
	Price Code	HD	HE	HE	HF	HF	HG	HG	HD	HD	HF	HG	HF	HF	HG	HK	HJ	HJ	HK	HL
	lbs./in.	1.5	6.6	20	5.2	15	39	94	3.6	9.4	23	50	7	16	34	115	5.6	12	25	80
	Max. Defl.	2.4	1.9	1.4	2.1	1.7	1.2	.93	2.4	2.0	1.6	1.3	2.2	1.9	1.6	1.0	2.4	2.1	1.8	1.3
4	Catalog No.	280	281	282	323	324	325	326	367	368	369	370	407	408	409	410	447	448	449	450
	Price Code	HE	HE	HE	HE	HF	HG	HG	HE	HE	HF	HG	HF	HF	HG	HL	HJ	HJ	HL	HM
	lbs./in.	1.1	4.9	15	3.9	11	29	69	2.6	6.9	17	37	5.2	12	25	86	4.2	9.2	18	59
	Max. Defl.	3.3	2.6	2.0	2.8	2.3	1.7	1.2	3.2	2.7	2.2	1.8	3.0	2.6	2.1	1.4	3.2	2.8	2.5	1.8
6	Catalog No.				327	328	329	330	371	372	373	374	411	412	413	414	451	452	453	454
	Price Code				HF	HF	HG	HG	HF	HF	HG	HG	HG	HG	HJ	HN	HK	HK	HL	HO
	lbs./in.				2.5	7.0	17	45	1.8	4.6	11	24	3.4	7.9	16	56	2.7	6.0	12	38
	Max. Defl.				4.4	3.5	2.5	2.	4.8	4.2	3.4	2.7	4.6	3.9	3.3	2.2	4.9	4.3	3.8	2.7
8	Catalog No.	NOTE: Stock springs can be ordered in stainless steel or plated. Prices quoted upon request.											415	416	417	418	455	456	457	458
	Price Code.												HJ	HJ	HK	HO	HL	HL	HM	HP
	lbs./in.												2.6	6	11	40	2.0	4.5	8.9	28
	Max. Defl.												6.1	5.2	4.5	3.0	6.5	5.8	5.1	3.7
Maximum Load		3.7	12.7	29	11	25	45	88	8.3	19	38	66	15.8	31.2	54	125	13.4	26.3	45	105
Will work free over		.347	.315	.285	.375	.345	.313	.281	.505	.475	.443	.411	.585	.554	.522	.460	.700	.670	.638	.576
Pitch		.195	.141	.128	.173	.151	.141	.141	.259	.214	.188	.177	.284	.240	.217	.204	.371	.306	.268	.239
Solid Stress (000 omitted)		125	118	113	118	113	109	105	118	113	109	105	113	109	105	99	113	109	105	99

Pounds per inch figure is a constant for each spring, and represents the number of pounds required to compress the spring 1". To compress the spring ½" or ¼" requires ½ or ¼ of this value.

Maximum Deflection is the amount spring deflects to give the maximum load. This value subtracted from the free length gives the solid or compressed length.

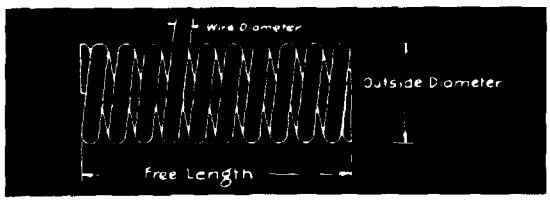

Will go in hole In.		1				1 1/4			1 1/2			2			3			4			6	
Wire Dia. In.		.078	.094	.125	.187	.094	.125	.187	.125	.187	.250	.187	.250	.375	.250	.375	.500	.375	.500	.750	.750	1.000
FREE LENGTHS	Catalog No.	459	460	461	462																	
1	Price Code	HK	HL	HL	HR																	
	lbs./in.	34	67	210	1500																	
	Max. Defl.	.67	.58	.41	.19																	
1¼	Catalog No.	463	464	465	466	499	500	501														
	Price Code	HL	HM	HM	HS	HN	HN	HM														
	lbs./in.	26	52	160	1100	35	100	600														
	Max. Defl.	.87	.76	.55	.26	.85	.67	.37														
1½	Catalog No.	467	468	469	470	502	503	504	526	527	528											
	Price Code	HL	HM	HN	HS	HN	HO	HT	HR	HX	HAC											
	lbs./in.	21	42	130	870	29	82	460	60	300	1200											
	Max. Defl.	1.0	.93	.69	.34	1.1	.84	.48	.95	.60	.35											
1¾	Catalog No.	471	472	473	474	505	506	507	529	530	531											
	Price Code	HL	HM	HN	HS	HN	HO	HT	HR	HX	HAC											
	lbs./in.	18	35	108	712	24	68	379	50	244	960											
	Max. Defl.	1.3	1.1	.83	.41	1.3	1.0	.59	1.1	.74	.44											
2	Catalog No.	475	476	477	478	508	509	510	532	533	534	553	554	555								
	Price Code	HM	HN	HO	HT	HO	HP	HU	HS	HZ	HAE	HAA	HAG	HZZ								
	lbs./in.	16	30	93	600	21	59	320	43	200	800	115	390	3000								
	Max. Defl.	1.4	1.3	.97	.49	1.4	1.2	.70	1.3	.87	.53	1.1	.77	.34								
3	Catalog No.	479	480	481	482	511	512	513	535	536	537	556	557	558	577	578	579					
	Price Code	HN	HO	HP	HZ	HP	HR	HAA	HT	HAD	HAL	HAE	HAN	HZZ	HAR	HZZ	HZZ					
	lbs./in.	10	19	59	370	13	37	200	27	130	480	73	230	1650	105	560	2300					
	Max. Defl.	2.2	2.0	1.5	.79	2.2	1.8	1.1	2.1	1.4	.89	1.8	1.3	.61	1.8	1.1	.64					
4	Catalog No.	483	484	485	486	514	515	516	538	539	540	559	560	561	580	581	582	598	599	610		
	Price Code	HP	HR	HS	HAC	HS	HT	HAD	HW	HAG	HAO	HAJ	HAR	HZZ	HAT	HZZ	HZZ	HZZ	HZZ	HZZ		
	lbs./in.	7.4	14	43	270	9.9	27	144	20	93	340	53	170	1150	76	390	1500	210	720	4600		
	Max. Defl.	3.0	2.7	2.1	1.1	3.0	2.5	1.5	2.8	1.9	1.2	2.5	1.8	.88	2.5	1.6	.96	2.1	1.4	.8		
6	Catalog No.	487	488	489	490	517	518	519	541	542	543	562	563	564	583	584	585	600	601	611	616	621
	Price Code	HR	HT	HU	HAD	HU	HW	HAE	HX	HAJ	HAT	HAM	HAW	HZZ	HAZ	HZZ	HZZ	HZZ	HZZ	HZZ	HZZ	HZZ
	lbs./in.	4.9	9.4	28	175	6.5	18	93	13	60	220	34	105	710	49	240	920	130	430	2840	850	3500
	Max. Defl.	4.6	4.1	3.2	1.7	4.7	3.9	2.4	4.3	3.0	1.9	3.8	2.8	1.4	4.0	2.6	1.6	3.4	2.4	1.3	1.9	1.4
8	Catalog No.	491	492	493	494	520	521	522	544	545	546	565	566	567	586	587	588	602	603	612	617	622
	Price Code	HS	HU	HW	HAL	HW	HX	HAM	HAA	HAP	HAW	HAR	HAZ	HZZ	HBD	HZZ	HZZ	HZZ	HZZ	HZZ	HZZ	HZZ
	lbs./in.	3.6	7.0	21	125	4.8	13	68	9.6	44	160	25	79	510	36	175	660	95	310	2050	630	2500
	Max. Defl.	6.2	5.6	4.3	2.3	6.3	5.2	3.2	5.9	4.1	2.7	5.2	3.9	1.9	5.4	3.6	2.2	4.5	3.4	1.8	2.7	2.0
12	Catalog No.	495	496	497	498	523	524	525	547	548	549	568	569	570	589	590	591	604	605	613	618	623
	Price Code	HT	HW	HZ	HAP	HX	HAA	HAR	HAC	HAU	HBA	HAZ	HBE	HZZ	HBK	HZZ	HZZ	HZZ	HZZ	HZZ	HZZ	HZZ
	lbs./in.	2.4	4.6	14	84	3.2	8.7	45	6.3	29	105	16	52	330	23	110	420	61	195	1325	400	1580
	Max. Defl.	9.4	8.4	6.5	3.5	9.5	7.9	5.0	8.9	6.2	4.1	8.0	5.9	3.0	8.3	5.5	3.5	7.3	5.3	2.6	4.3	3.1
16	Catalog No.	NOTE: Stock springs can be ordered in stainless steel or plated. Prices quoted upon request							550	551	552	571	572	573	592	593	594	606	607	614	619	624
	Price Code								HAE	HAW	HBD	HAZ	HBG	HZZ	HBL	HZZ	HZZ	HZZ	HZZ	HZZ	HZZ	HZZ
	lbs./in.								4.7	21	74	12	38	240	17	83	310	45	145	975	300	1170
	Max. Defl.								11.9	8.5	5.6	10.7	8.0	4.1	11.3	7.5	4.0	10	7.3	3.8	6.1	4.3
24	Catalog No.											574	575	576	595	596	597	608	609	615	620	625
	Price Code											HBA	HBL	HZZ	HBP	HZZ	HZZ	HZZ	HZZ	HZZ	HZZ	HZZ
	lbs./in.											7.8	23.4	150	11.4	54	200	29	94	640	175	760
	Max. Defl.											16.3	12.1	7.0	17.1	11.5	7.3	15.2	11.1	5.8	9.4	6.5
Maximum Load		23	39	90	295	30	69	224	57	180	428	131	307	1000	195	624	1470	449	1040	3700	2000	4800
Will work free over		.784	.752	.690	.565	1.00	.940	.815	1.19	1.06	.940	1.52	1.39	1.14	2.33	2.08	1.83	3.08	2.83	2.25	4.25	3.75
Pitch		.382	.328	.279	.268	.481	.384	.327	.516	.403	.388	.596	.518	.514	.917	.741	.736	1.08	.969	1.00	1.3	1.4
Solid Stress (000 omitted)		109	105	99	90	105	99	90	99	90	85	90	85	77	85	77	73	77	73	70	70	65

Pounds per inch figure is a constant for each spring, and represents the number of pounds required to compress the spring 1". To compress the spring ½" or ¼" requires ½ or ¼ of this value.

Maximum Deflection is the amount spring deflects to give the maximum load. This value subtracted from the free length gives the solid or compressed length.

Hardware Products Company, Inc.

EXTENSION SPRINGS

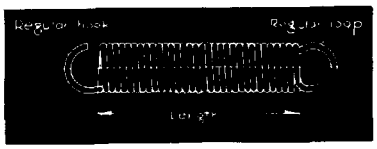

ORDER BY:
SE LENGTH x O.D. x WIRE DIA.

SPECIFY HOOKS OR LOOPS

The figures given for "Maximum Extension" and "lbs. per inch" are for a spring 1" long. For other lengths multiply the "Maximum Extension" and divide the "lbs. per inch" by the length in inches. The "Maximum Load" and "Initial Tension" remain constant for any length.

Example: A spring ½" diam. .062" wire and 4" long will have a safe maximum extension of 3.2" and it will require 4 lbs. to deflect it 1 in. The spring will hold approximately 3.3 lbs. before it starts to extend, and will hold a maximum of 16.1 lbs. without permanent stretch. If 8.5 lbs. is hung on the spring it will deflect 1.3". 8.5 lbs. minus 3.3 lbs. divided by 4 lbs. per inch equals 1.3".

FOR QUICK DELIVERY
Call 617-884-9410

NOTE: Stock springs can be ordered in stainless steel or plated. Prices quoted upon request

Outside dia.	Wire dia.	Catalog No.	Price code	Safe maximum load in pounds	Safe maximum extension - in.	Approx. initial tension in pounds	Pound per inch extension	Stress at max. load (000 omitted)	Weight per foot (lbs.)
1/8	.012	01	EHE	.6	1.9	.07	.27	100	.012
	.016	02	EHD	1.3	.9	.2	1.2	93	.015
	.023	03	EHD	4.2	.35	.9	9.0	90	.02
5/32	.012	04	EHE	.47	3.5	.01	.12	100	.015
	.016	05	EHD	1.1	1.7	.15	.55	93	.019
	.023	06	EHD	3.2	.7	.5	3.9	90	.027
3/16	.016	07	EHD	.87	2.5	.1	.3	93	.024
	.023	08	EHD	2.6	1.0	.4	2.2	90	.032
	.031	09	EHD	6.5	.45	1.5	10.7	88	.04
7/32	.016	10	EHD	.75	4.0	.01	.18	93	.028
	.023	11	EHD	2.3	1.6	.32	1.2	90	.039
	.031	12	EHD	5.5	.7	1.0	6.5	88	.048
1/4	.023	13	EHD	1.8	1.9	.26	.8	90	.044
	.031	14	EHD	4.7	1.0	.75	3.8	88	.055
	.047	15	EHE	16.0	.3	3.5	40.0	83	.082
5/16	.023	16	EHE	1.5	3.5	.16	.38	90	.058
	.031	17	EHE	3.6	1.6	.55	1.9	88	.072
	.047	18	EHE	12.5	.9	2.2	10.8	83	.108
3/8	.031	19	EHE	2.9	2.5	.37	1.0	88	.084
	.047	20	EHE	10.5	.9	1.7	9.5	83	.13
	.062	21	EHF	23.0	.39	5.3	45.0	79	.16
7/16	.031	22	EHF	2.5	3.5	.26	.63	88	.105
	.047	23	EHF	8.5	1.2	1.4	5.7	83	.163
	.062	24	EHF	20.0	.6	4.3	26.0	79	.2
1/2	.047	25	EHF	7.3	1.6	1.1	3.7	83	.18
	.062	26	EHF	17.0	.8	3.3	16.0	79	.23
	.078	27	EHG	34.0	.45	8.0	57.0	77	.28
	.094	28	EHJ	57.0	.25	16.0	160.0	74	.32
5/8	.047	29	EHG	6.0	3.0	.7	1.7	83	.24
	.062	30	EHG	13.3	1.4	2.1	7.6	79	.3
	.078	31	EHG	27.0	.9	5.2	23.0	77	.37
	.094	32	EHJ	45.0	.4	11.0	73.0	74	.44
3/4	.062	33	EHG	10.5	2.2	1.5	4.1	79	.36
	.078	34	EHJ	22.0	1.3	3.5	14.0	77	.46
	.094	35	EHJ	36.0	.7	8.0	38.0	74	.51
	.125	36	EHK	85.0	.3	22.0	180.0	69	.64
7/8	.062	37	EHK	9.2	3.3	1.1	2.4	79	.4
	.078	38	EHK	18.0	1.7	2.6	8.7	77	.59
	.094	39	EHL	31.0	1.0	6.0	25.0	74	.64
	.125	40	EHM	72.0	.5	17.0	107.0	69	.8
1	.078	41	EHL	16.0	2.5	2.0	5.5	77	.67
	.094	42	EHL	26.0	1.5	4.5	13.7	74	.70
	.125	43	EHN	65.0	.75	14.0	68.0	69	.90
	.187	44	EHW	200.0	.23	60.0	600.0	63	1.4
1¼	.094	45	EHM	21.0	2.6	2.8	6.8	74	.94
	.125	46	EHO	47.0	1.2	9.0	31.0	69	1.3
	.187	47	EHZ	148.0	.3	40.0	290.0	63	1.8
1½	.125	48	EHS	39.0	1.9	6.0	17.0	69	1.4
	.187	49	EHAA	122.0	.6	33.0	150.0	63	2.2
	.250	50	EHAC	290.0	.27	90.0	720.0	60	2.6
2	.187	51	EHAD	90.0	1.3	20.0	54.0	63	3.1
	.250	52	EHAG	210.0	.6	55.0	260.0	60	3.7

Carried in stock in 3-foot lengths - cut to length and looped to order.

Hardware Products Company, Inc.

191 WILLIAMS STREET • CHELSEA, MA 02150

Appendix E

ATLAS OF GEARED FIVEBAR LINKAGE COUPLER CURVES

C. *Zhang, R. L. Norton, T. Hammond*

The following pages of coupler curve data are excerpted from the complete work. See Sections 3.6 (p. 103), 4.8 (p. 164), 6.8 (p. 278), and 7.4 (p.319) for more information on the geared fivebar linkage. Use program FIVEBAR to investigate other linkage geometries.

Alpha = Coupler Link 3 / Link 2

Beta = Ground Link 1 / Link 2

Lambda = Gear Ratio = Gear 5 / Gear 2.*

Phase angle is noted on each plot of a coupler curve.

The dots along curves are at every 10 degrees of Link 2's rotation.

Linkage is symmetrical: Link 2 = Link 5 and Link 3 = Link 4

* Note that this lambda is the **inverse** of the λ which is defined in Sections 4.8, 6.8, and 7.4. See also Figures P4-4 (p. 139), P6-4 (p. 229), and P7-4 (p. 263). For example, a gear ratio λ of 2 in this atlas corresponds to a λ of 0.5 in the text and in program FIVEBAR. (The difference merely corresponds to a mirroring of the linkage from left to right.)

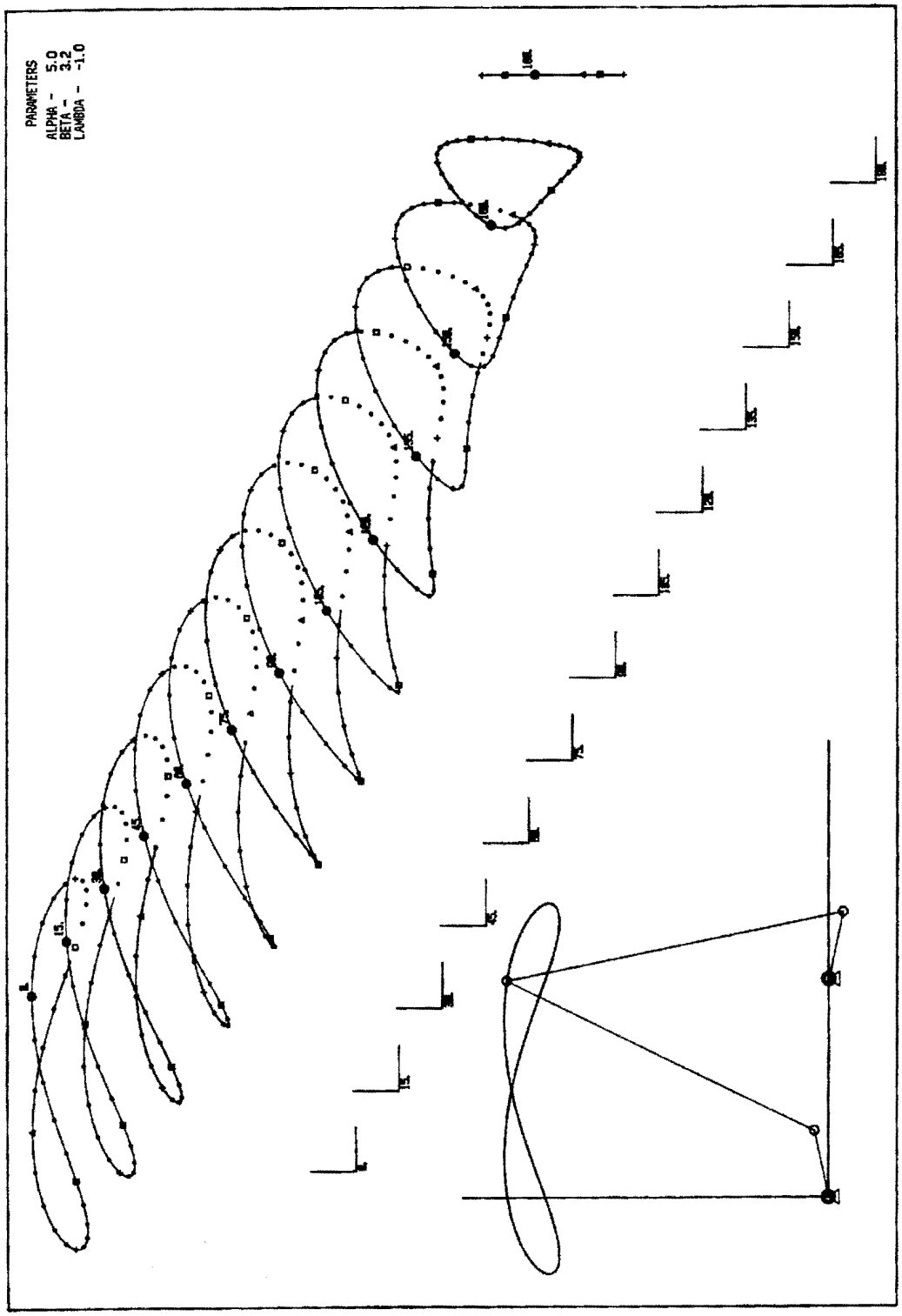
PARAMETERS
ALPHA - 5.0
BETA - 3.2
LAMBDA - -1.0

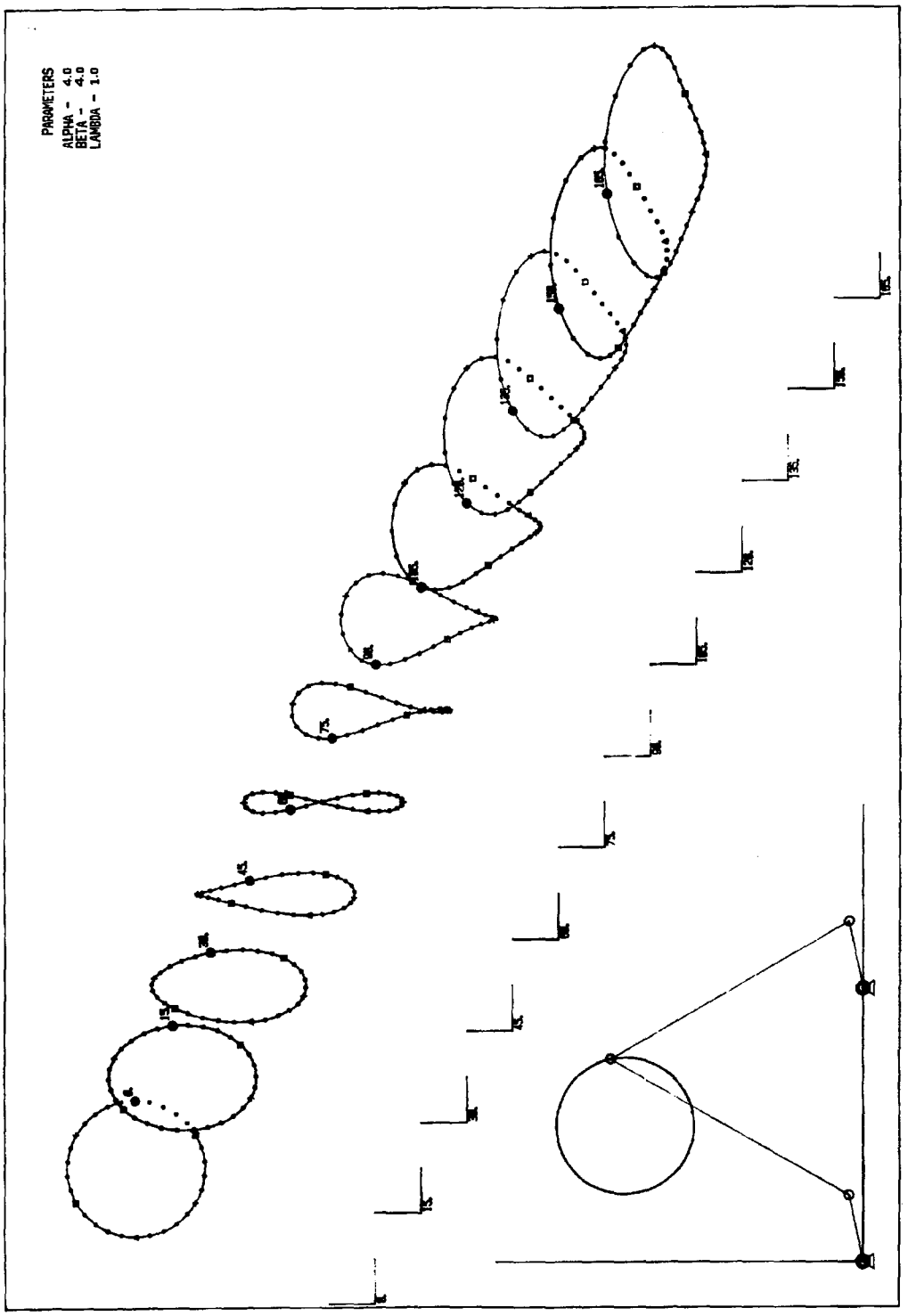
PARAMETERS
ALPHA - 4.0
BETA - 4.0
LAMBDA - 1.0

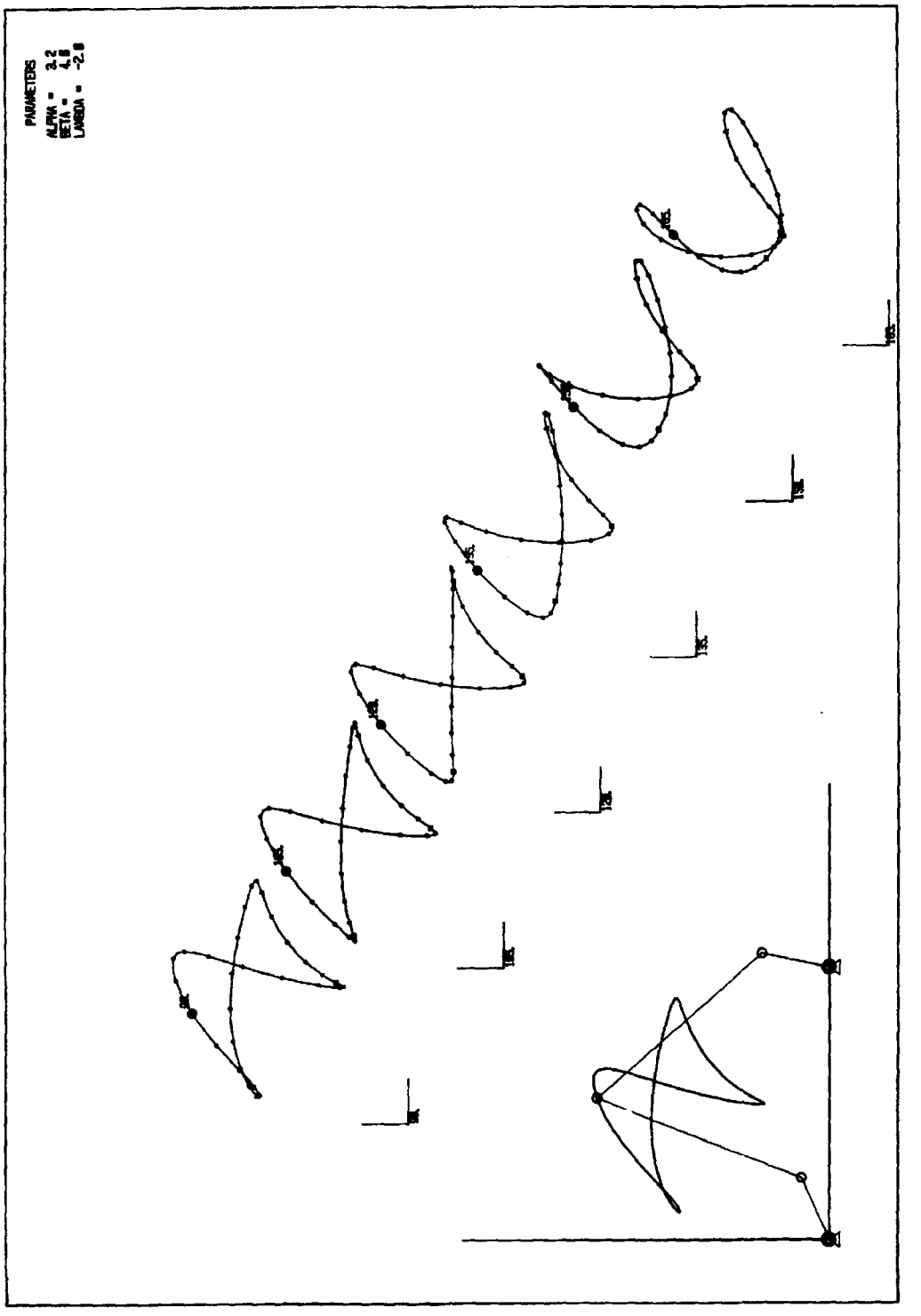
PARAMETERS
ALPHA = 3.2
BETA = 4.8
LAMBDA = -2.8

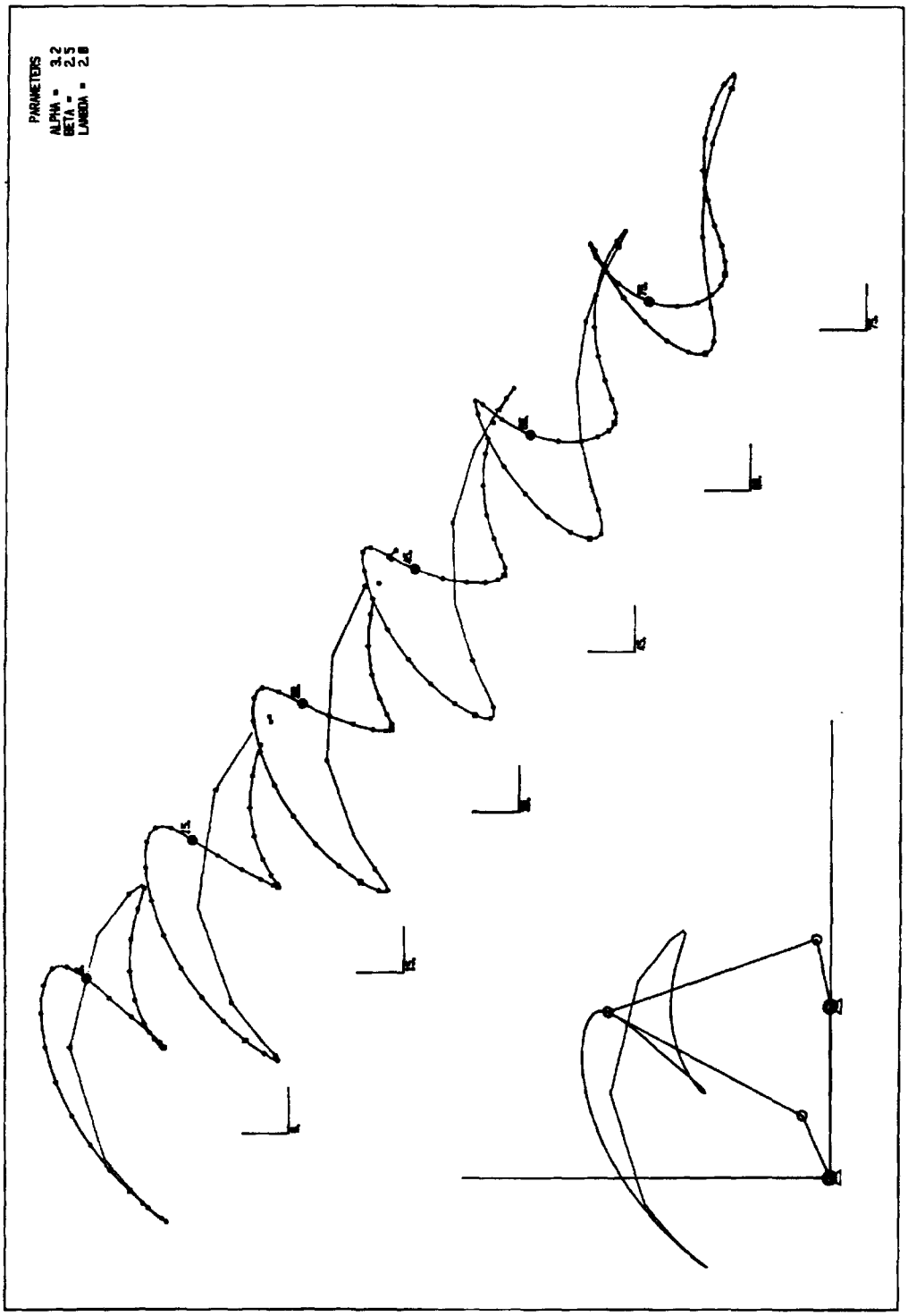
PARAMETERS
ALPHA = 3.2
BETA = 2.5
LAMBDA = 2.0

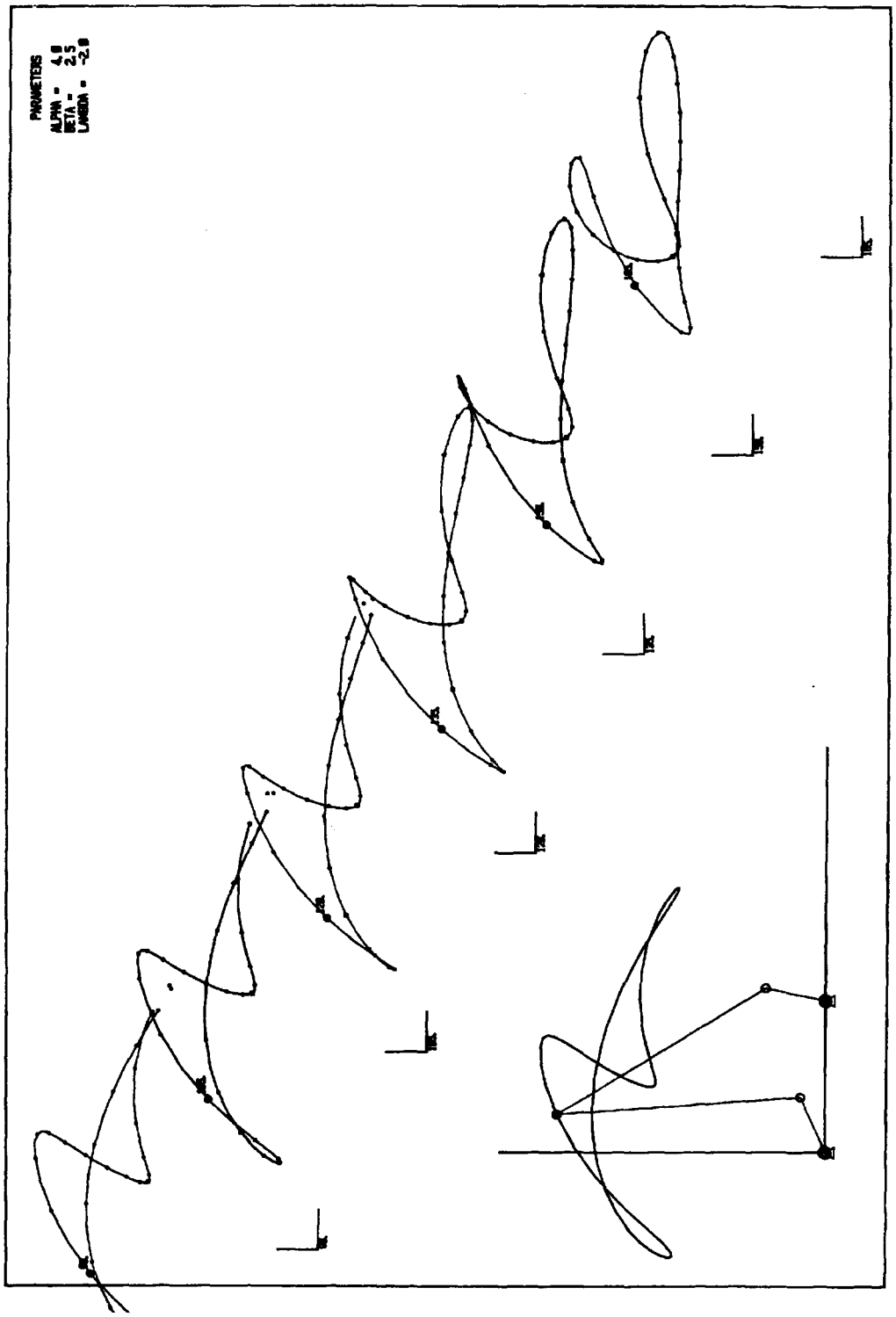
PARAMETERS
ALPHA = 4.0
BETA = 2.5
LAMBDA = -2.0

Appendix F

ANSWERS TO SELECTED PROBLEMS

CHAPTER 2 KINEMATICS FUNDAMENTALS

2-1

a. 1 b. 1 c. 2 d. 4 e. 7 f. 4 g. 4
h. 4 i. 4 j. 2 k. 1 l. 1 m. 2 n. 2
o. 4 p. as many as it has sections q. 3

2-5 a. 6 b. 6 c. 3 d. 3 e. 10 f. 3

2-7

a. pure rotation
b. complex planar motion
c. pure translation
d. pure translation
e. pure rotation
f. complex planar motion
g. pure translation
h. pure translation
i. complex planar motion

2-8 a. 1 b. 3 c. 3 d. 3 e. 1

2-9 force closed

2-10

a. structure - $DOF = 0$
b. mechanism - $DOF = 1$
c. mechanism - $DOF = 1$
d. mechanism - $DOF = 3$

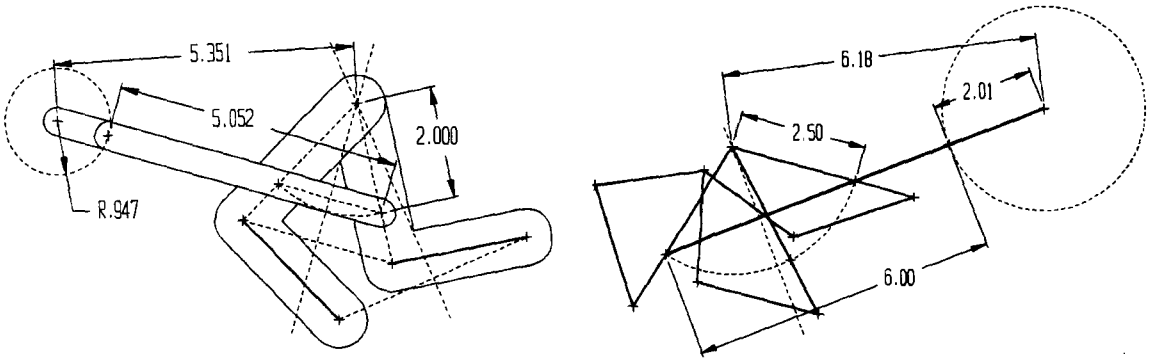

(*a*) One possible solution to Problem 3-3 (*b*) One possible solution to Problem 3-5

FIGURE S3-1
Solutions to Problems 3-3 and 3-5

2-15 a. Grashof b. non-Grashof c. special-case Grashof

2-21

a. $M = 1$ b. $M = 1$ c. $M = 1$
d. $M = 1$ e. $M = -1$ (a paradox) f. $M = 1$
g. $M = 1$ h. $M = 0$ (a paradox)

2-24 a. $M = 1$ b. $M = 1$

2-26 $M = 1$

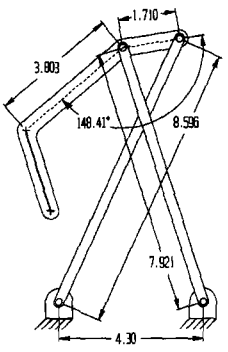

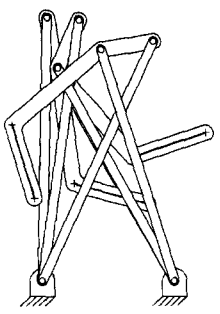

FIGURE S3-2
Unique solution to Problem 3-6

CHAPTER 3 GRAPHICAL LINKAGE SYNTHESIS

3-1

a. Path generation
b. Motion generation
c. Function generation
d. Path generation
e. Path generation

Note that synthesis problems have many valid solutions. We cannot provide a "right answer" to all of these design problems. Check your solution with a cardboard model and/or by putting it into one of the programs supplied with the text.

3-3 See Figure S3-1.

3-5 See Figure S3-1.

3-6 See Figure S3-2.

3-8 See Figure S3-3.

3-10 The solution using Figure 3-17 (p. 106) is shown in Figure S3-4. (Use program FOURBAR to check your solution.)

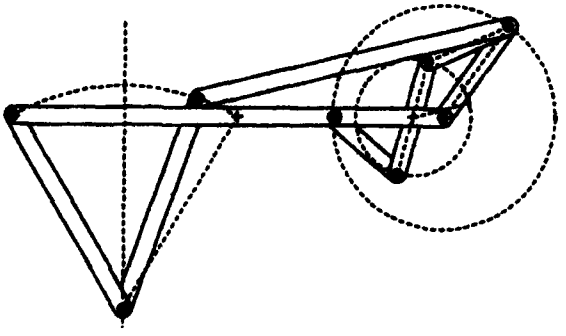

FIGURE S3-3

One possible solution to Problem 3-8

3-22 The transmission angle ranges from 31.5° to 89.9°.

3-23 Grashof crank-rocker. Transmission angle ranges from 58.1° to 89.8°.

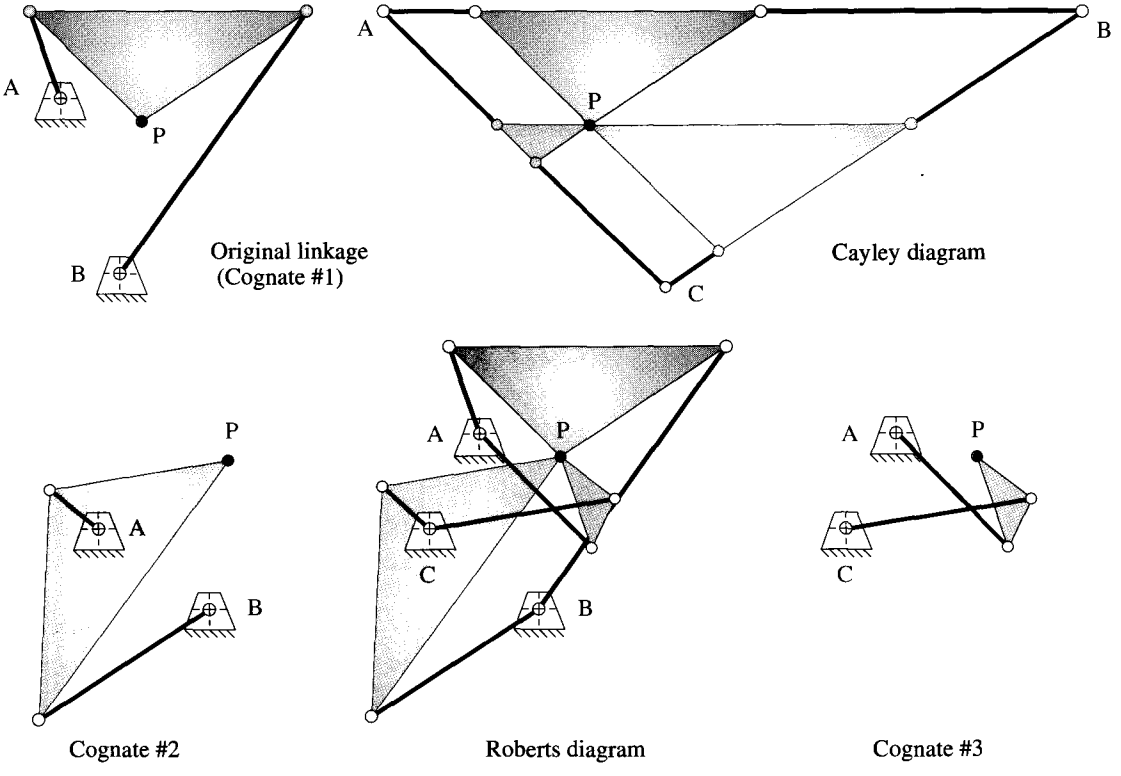

FIGURE S3-4

Solution to Problem 3-10. Finding the cognates of the fourbar linkage shown in Figure 3-17 (p. 106)

TABLE S4-1 Solutions for Problems 4-6, 4-7, and 4-13

Row	θ_3 open	θ_4 open	Trans Ang	θ_3 crossed	θ_4 crossed	Trans Ang
a	88.8	117.3	28.4	−115.2	−143.6	28.4
c	−53.1	16.5	69.6	173.3	103.6	69.6
e	7.5	78.2	70.7	−79.0	−149.7	70.7
g	−16.3	7.2	23.5	155.7	132.2	23.5
i	−1.5	103.1	75.4	−113.5	141.8	75.4
k	−13.2	31.9	45.2	−102.1	−147.3	45.2
m	−3.5	35.9	39.4	−96.5	−135.9	39.4

TABLE S4-2 Solutions for Problems 4-9 to 4-10

Row	θ_3 open	*Slider* open	θ_3 crossed	*Slider* crossed
a	180.1	5.0	−0.43	−3.0
c	205.9	9.8	−25.90	−4.6
e	175.0	16.4	4.20	−23.5
g	212.7	27.1	−32.70	−14.9

TABLE S4-3 Solutions for Problems 4-11 to 4-12

Row	θ_3 open	θ_4 open	R_B open	θ_3 crossed	θ_4 crossed	R_B crossed
a	232.7	142.7	1.79	−79.0	−169.0	−1.79
c	91.4	46.4	2.72	208.7	163.7	−11.20
e	158.2	128.2	6.17	−36.2	−66.2	−9.63

TABLE S4-4 Solutions for Problems 4-16 to 4-17

Row	θ_3 open	θ_4 open	θ_3 crossed	θ_4 crossed
a	173.6	−177.7	−115.2	−124.0
c	17.6	64.0	−133.7	180.0
e	−164.0	−94.4	111.2	41.6
g	44.2	124.4	−69.1	−149.3
i	37.1	120.2	−67.4	−150.5

3-36 Grashof double-rocker. Works from 50° to 158° and from 202° to 310°. Transmission angle ranges from 0° to 89.8°.

3-42 Non-Grashof triple-rocker. Toggles at ± 55.4°. Transmission angle ranges from 0° to 88.8°.

CHAPTER 4 POSITION ANALYSIS

4-6 and **4-7** See Table S4-1 and the file P07-04*row*.4br.

4-9 and **4-10** See Table S4-2.

4-11 and **4-12** See Table S4-3.

4-13 See Table S4-1.

4-14 Open the file P07-04*row*.4br† in Program FOURBAR to see this solution.*

4-15 Open the file P07-04*row*.4br† in Program FOURBAR to see this solution.*

4-16 See Table S4-4.

4-17 See Table S4-4.

4-21 Open the file P04-21.4br in Program FOURBAR to see this solution.*

4-23 Open the file P04-23.4br in Program FOURBAR to see this solution.*

4-25 Open the file P04-25.4br in Program FOURBAR to see this solution.*

4-26 Open the file P04-26.4br in Program FOURBAR to see this solution.*

4-29 Open the file P04-29.4br in Program FOURBAR to see this solution.*

4-30 Open the file P04-30.4br in Program FOURBAR to see this solution.*

CHAPTER 5 ANALYTICAL LINKAGE SYNTHESIS

5-8 Given: $\alpha_2 = -62.5°$, $P_{21} = 2.47$, $\delta_2 = 120°$

For left dyad: Assume: $z = 1.075$, $\phi = 204°$ $\beta_2 = -27°$

Calculate: $\mathbf{W} = 3.67 \angle -113.5°$

For right dyad: Assume: $s = 1.24$, $\psi = 74°$ $\gamma_2 = -40°$

Calculate: $\mathbf{U} = 5.46 \angle -125.6°$

5-11 See Figure S5-1 for the solution. The link lengths are:

Link 1 = 4.35, Link 2 = 3.39, Link 3 = 1.94, Link 4 = 3.87

5-15 See Figure S5-2 for the solution. The link lengths are:

Link 1 = 3.95, Link 2 = 1.68, Link 3 = 3.05, Link 4 = 0.89

5-19 See Figure S5-3 for the solution. The link lengths are:

Link 1 = 2, Link 2 = 2.5, Link 3 = 1, Link 4 = 2.5

* These files can be found in the PROBLEM SOLUTIONS folder on the CD-ROM included with this text.

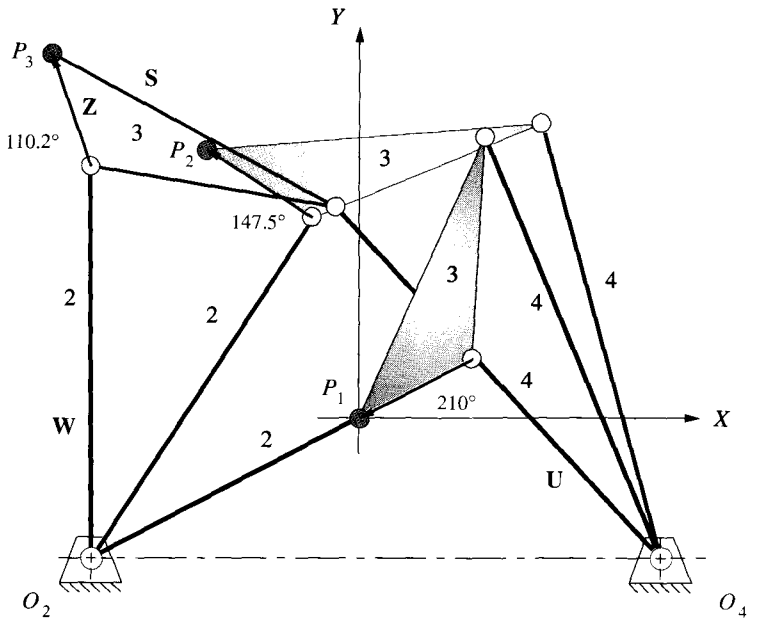

FIGURE S5-1

Solution to Problem 5-11. Open the file P05-11 in program FOURBAR for more information

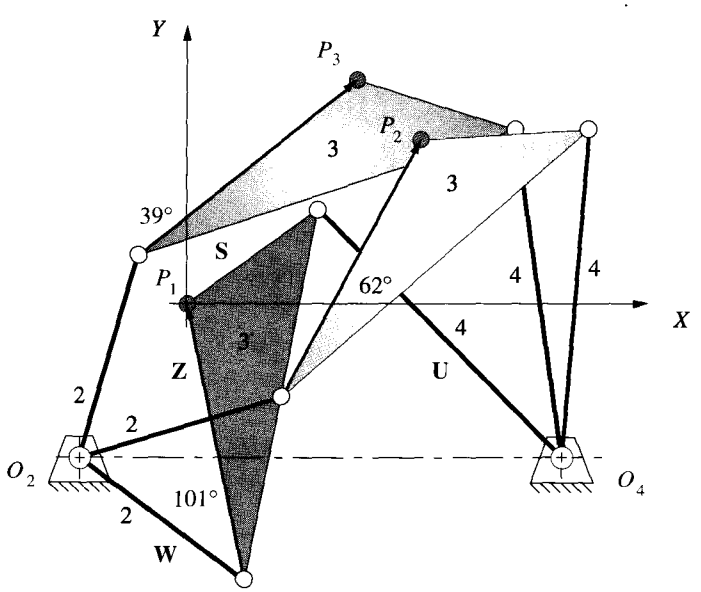

FIGURE S5-2

Solution to Problem 5-15. Open the file P05-15 in program FOURBAR for more information.

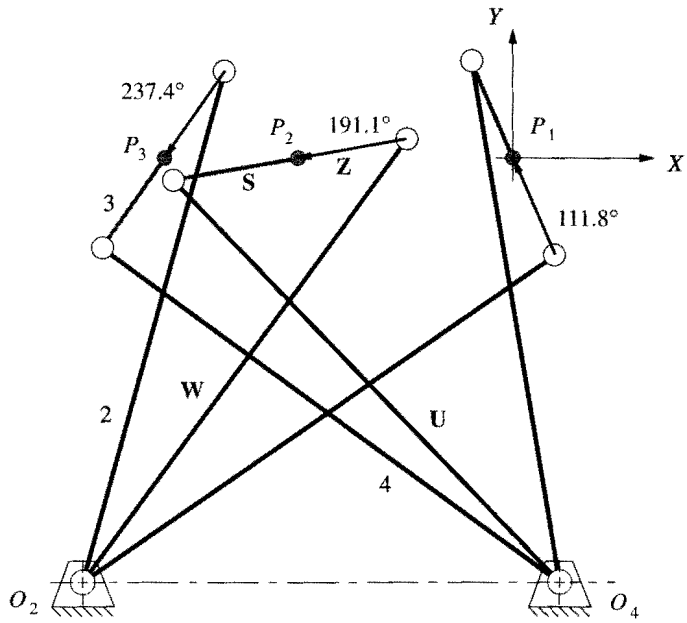

FIGURE S5-3

Solution to Problem 5-19. Open the file P05-19 in program FOURBAR for more information.

5-26 Given: $\alpha_2 = -45°$, $P_{21} = 184.78$ mm, $\delta_2 = -5.28°$

$\alpha_3 = -90°$, $P_{31} = 277.35$ mm, $\delta_3 = -40.47°$

$O_{2x} = 86$ mm $O_{2y} = -132$ mm

$O_{4x} = 104$ mm $O_{4y} = -155$ mm

For left dyad: Calculate: $\beta_2 = -85.24°$ $\beta_3 = -164.47°$

Calculate: $W = 110.88$ mm $\theta = 124.24°$

Calculate: $Z = 46.74$ mm $\phi = 120.34°$

For right dyad: Calculate: $\gamma_2 = -75.25°$ $\gamma_3 = -159.53°$

Calculate: $U = 120.70$ mm $\sigma = 104.35°$

Calculate: $S = 83.29$ mm $\psi = 152.80°$

CHAPTER 6 VELOCITY ANALYSIS

6-4 and **6-5** See Table S6-1 and the file P07-04*row*.4br.

6-6 and **6-7** See Table S6-2.

6-8 and **6-9** See Table S6-3.

6-10 and **6-11** See Table S6-4.

6-47 Open the file P06-47.4br in Program FOURBAR to see this solution.*

6-48 Open the file P06-48.4br in Program FOURBAR to see this solution.*

6-49 Open the file P06-49.4br in Program FOURBAR to see this solution.*

6-51 Open the file P06-51.4br in Program FOURBAR to see this solution.*

6-62 Open the file P06-62.4br in Program FOURBAR to see this solution.*

CHAPTER 7 ACCELERATION ANALYSIS

7-3 and **7-4** See Table S7-1 and the file P07-04row.4br.

7-5 and **7-6** See Table S7-2.

7-7 and **7-8** See Table S7-3.

7-9 See Table S7-4.

7-39 Open the file P07-39.4br in Program FOURBAR to see this solution.*

7-40 Open the file P07-40.4br in Program FOURBAR to see this solution.*

7-41 Open the file P07-41.4br in Program FOURBAR to see this solution.*

7-42 Open the file P07-42.4br in Program FOURBAR to see this solution.*

7-44 Open the file P07-44.4br in Program FOURBAR to see this solution.*

7-56 Tipover at 19.0 to 20.3 mph; load slides at 16.2 to 19.5 mph.

CHAPTER 8 CAM DESIGN

Most of the problems in this cam chapter are design problems with more than one correct solution. Use program DYNACAM to check your solution obtained with *Mathcad* or *TKSolver* and also to explore various solutions and compare them to find the best one for the constraints given in each problem.

8-1 See Figure S8-1.

CHAPTER 9 GEAR TRAINS

9-1 Pitch diameter = 5.5, circular pitch = 0.785, addendum = 0.25, dedendum = 0.313, tooth thickness = 0.393, and clearance = 0.063.

9-5 a. $p_d = 4$, b. $p_d = 2.67$

* These files can be found in the PROBLEM SOLUTIONS folder on the CD-ROM included with this text.

TABLE S6-1 Solutions for Problems 6-4 to 6-5

Row	ω_3 open	ω_4 open	V_P mag	V_P ang	ω_3 crossed	ω_4 crossed	V_P mag	V_P ang
a	−6.0	−4.0	40.8	58.2	−0.66	−2.66	22.0	129.4
c	−12.7	−19.8	273.8	−53.3	−22.7	−15.7	119.1	199.9
e	1.85	-40.8	260.5	−12.1	−23.3	19.3	139.9	42.0
g	76.4	146.8	798.4	92.9	239.0	168.6	1435.3	153.9
i	−25.3	25.6	103.1	−13.4	56.9	6.0	476.5	70.4
k	−56.2	−94.8	436.0	−77.4	−55.6	−16.9	362.7	79.3
m	18.3	83.0	680.8	149.2	7.73	−57.0	571.3	133.5

TABLE S6-2 Solutions for Problems 6-6 to 6-7

Row	V_A mag	V_A ang	ω_3 open	V_B mag open	ω_3 crossed	V_B mag crossed
a	14	135	−2.47	−9.87	2.47	−9.92
c	45	−120	5.42	−41.5	−5.42	−3.54
e	250	135	−8.86	−189.7	8.86	−163.8
g	700	60	−28.8	738.9	28.8	−38.9

TABLE S6-3 Solutions for Problems 6-8 to 6-9

Row	V_A mag	V_A ang	V_{slip} open	V_B mag open	ω_3 crossed	V_{slip} crossed
a	−10.3	−10.3	33.5	3.6	3.6	−33.5
c	23.8	23.8	73.0	33.0	33.0	−73.0
e	−2.7	−2.7	−176.0	−8.2	−8.2	176.0

TABLE S6-4 Solutions for Problems 6-10 to 6-11

Row	ω_3 open	ω_4 open	ω_3 crossed	ω_4 crossed
a	32.6	16.9	−75.2	−59.6
c	10.7	−2.6	−8.2	5.1
e	−158.3	−81.3	−116.8	−193.9
g	−8.9	−40.9	−48.5	−16.5
i	−40.1	47.9	59.6	−28.4

TABLE S7-1 Solutions for Problems 7-3 to 7-4

Row	α_3 open	α_4 open	A_P mag	A_P ang	α_3 crossed	α_4 crossed	A_P mag	A_P ang
a	26.1	53.3	419	240.4	77.9	50.7	298	−11.3
c	−154.4	−71.6	4400	238.9	−65.2	−148.0	3554	100.6
e	331.9	275.6	10 260	264.8	1287.7	1344.1	19 340	−65.5
g	−23 510.	−19 783.	172 688	191.0	−43 709.	−47 436.	273 634	−63.0
i	−344.6	505.3	9492	−81.1	121.9	−728.0	27 871	150.0
k	−2693.	−4054.	56 271	220.2	311.0	1672.1	27 759	−39.1
m	680.8	149.2	35 149	261.5	9266.1	10 303.	63 831	103.9

TABLE S7-2 Solutions for Problems 7-5 to 7-6

Row	A_A mag	A_A ang	α_3 open	A_B mag open	A_B ang open	α_3 cross	A_B mag cross	A_B ang cross
a	140	−135	25	124	180	−25	74	180
c	676	153	−29	709	180	29	490	180
e	12 500	45	−447	6653	0	447	11 095	0
g	70 000	150	−1136	62 688	180	1136	58 429	180

TABLE S7-3 Solutions for Problems 7-7 to 7-8

Row	α_3 open	α_4 open	A_{slip} open	α_3 crossed	α_4 crossed	A_{slip} crossed
a	130.5	130.5	−3111.7	−9.9	−9.9	1125.2
c	−212.9	−212.9	3327.9	−217.8	−217.8	6776.4
e	896.3	896.3	2020.1	595.6	595.6	−1044.4

TABLE S7-4 Solutions for Problem 7-9

Row	α_3 open	α_4 open	α_3 crossed	α_4 crossed
a	3191	2492	−6648	−5949
c	314	228	87	147
e	2171	−6524	7781	5414
g	−22 064	−23 717	−5529	−29 133
i	−5697	−3380	−2593	−7184

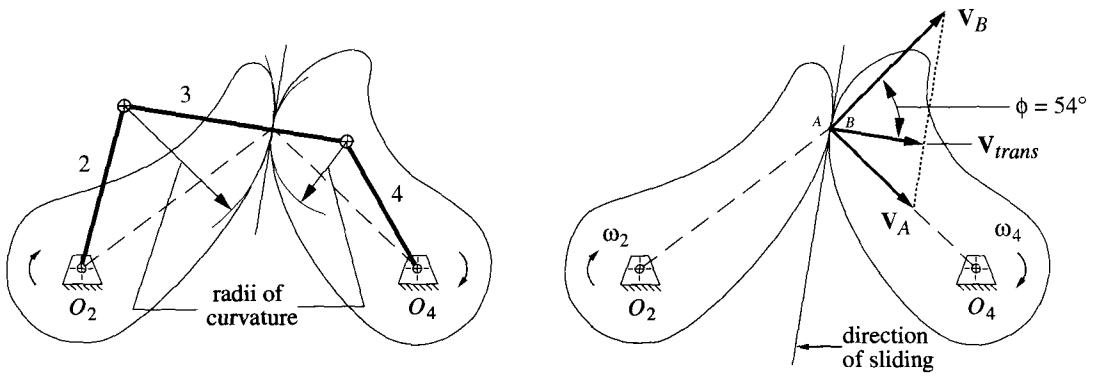

(a) Effective linkage for Problem 8-1 (b) Pressure angle ϕ for Problem 8-2

FIGURE S8-1

Solutions to Problems 8-1 and 8-2

9-6 Assume a minimum no. of teeth = 14, then: pinion = 14t and 1.84-in pitch dia. Gear = 126t and 16.58-in pitch dia.

9-7 Assume a minimum no. of teeth = 14, then: pinion = 14t and 2.33-in pitch dia. Gear = 112t and 18.67-in pitch dia. An idler gear of any dia. is needed to get the positive ratio.

9-10 Two stages of 8:1 and 8.75:1 give 70:1. Using 14 teeth minimum gives stage 1 = 14t (1.4 dia.) to 112t (11.2 dia.). Stage 2 = 16t (1.6 dia.) to 140t (14 dia).

9-12 The square root of 150 is > 10 so will need three stages. 5 x 5 x 6 = 150. Using a minimum no. of teeth = 15 gives 15:75, 15:75 and 15:90 teeth. Pitch dias. are 2.5, 12.5 and 15 in.

9-14 The factors 5 x 6 = 30. The ratios 14:70 and 12:72 revert to same center distance of 4.2. Pitch dias. are 1.4, 1.2, 7, and 7.2.

9-16 The factors 7.5 x 10 = 75. The ratios 22:165 and 17:170 revert to same center distance of 6.234. Pitch dias. are 1.467, 1.133, 11, and 11.33.

9-19 The factors 2 x 1.5 = 3. The ratios 15:30 and 18:27 revert to the same center distance of 3.75. Pitch dias. are 2.5, 5, 3, and 4.5. The reverse train uses the same 1:2 first stage as the forward train, so it needs a second stage of 1:2.25 which is obtained with a 12:27 gearset. The center distance of the 12:27 reverse stage is 3.25 which is less than that of the forward stage. This allows the reverse gears to engage through an idler of any suitable diameter to reverse output direction.

9-21 For the low speed of 6:1, the factors 2.333 x 2.571 = 6. The ratios 15:35 and 14:36 revert to the same center distance of 3.125. Pitch dias. are 1.875, 4.375, 1.75, and 4.5. The second speed train uses the same 1:2.333 first stage as the low speed train, so it needs a second stage of 1:1.5 which is obtained with a 20:30 gearset which reverts to the same center distance of 3.125. The additional pitch dias. are 2.5 and 3.75. The reverse train also uses the same 1:2.333 first stage as both forward trains, so it needs a second stage of 1:1.714 which is obtained with a 14:24 gearset. The center distance of the 14:24 reverse stage is 2.375 which is less than that of the forward stages. This allows the reverse gears to engage through an idler of any suitable diameter to reverse output direction.

TABLE S9-1 Solution to Problem 9-29

Possible ratios for two-stage compound gear train to give the ratio 2.71828

Pinion1	Gear 1	Ratio1	Pinion 2	Gear 2	Ratio 2	Train ratio	Abs error
25	67	2.68	70	71	1.014	2.71828571	5.71E-06
29	57	1.966	47	65	1.383	2.71826853	1.15E-05
30	32	1.067	31	79	2.548	2.71827957	4.30E-07
30	64	2.133	62	79	1.274	2.71827957	4.30E-07
31	48	1.548	45	79	1.756	2.71827957	4.30E-07
31	64	2.065	60	79	1.317	2.71827957	4.30E-07
31	79	2.548	75	80	1.067	2.71827957	4.30E-07
35	67	1.914	50	71	1.420	2.71828571	5.71E-06

9-25 a. $\omega_2 = 790$, c. $\omega_{arm} = -4.544$, e. $\omega_6 = -61.98$

9-26 a. $\omega_2 = -59$, c. $\omega_{arm} = 61.54$, e. $\omega_6 = -63.33$

9-27 a. 560.2 rpm and 3.57 to 1, b. $x = 560.2 \times 2 - 800 = 320.4$ rpm

9-29 See Table S9-1 for solution. The third row has the smallest error and smallest gears.

CHAPTER 10 DYNAMICS FUNDAMENTALS

10-1 *CG* @ 7.89 in. from handle end, $I_{zz} = 0.1873$ in-lb-sec^2, $k = 8.39$ in.

10-2 *CG* @ 6.74 in. from handle end, $I_{zz} = 0.0918$ in-lb-sec^2, $k = 7.38$ in.

10-4

a. $x = 3.547$, $y = 4.8835$, $z = 1.4308$, $w = -1.3341$

b. $x = -62.029$, $y = 0.2353$, $z = 17.897$, $w = 24.397$

10-6

a. In series: $k_{eff} = 3.09$, Softer spring dominates

b. In parallel: $k_{eff} = 37.4$, Stiffer spring dominates

10-9

a. In series: $c_{eff} = 1.09$, Softer damper dominates

b. In parallel: $c_{eff} = 13.7$, Stiffer damper dominates

10-12 $k_{eff} = 4.667$, $m_{eff} = 0.278$

10-20 Effective mass in 1st gear = 0.054 bl, 2nd gear = 0.096 bl, 3rd gear = 0.216 bl, 4th gear = 0.862 bl.

10-21 Effective spring constant at follower = 308.35 lb/in.

CHAPTER 11 DYNAMIC FORCE ANALYSIS

11-3 Open file P11-03*row*.sld in program SLIDER to check your solution.*

11-4 Open file P11-03*row*.sld in program SLIDER to check your solution.*

* These files can be found in the PROBLEM SOLUTIONS folder on the CD-ROM included with this text.

11-5 Open file P11-05*row*.4br in program FOURBAR to check your solution.*

11-6 Open file P11-05*row*.4br in program FOURBAR to check your solution.*

11-7 Open file P11-07*row*.4br in program FOURBAR to check your solution.*

11-12 $F_{12} = 904.0$ N, $F_{14} = 1\,440.5$ N, $F_{32} = 344.2$ N, $F_{43} = 723.2$ N
$T_{12} = -7.7$ N-m

11-13 Open file P11-13.4br in program FOURBAR to check your solution.*

CHAPTER 12 BALANCING

12-1

a. $m_b r_b = 0.934$, $\theta_b = -75.5°$
c. $m_b r_b = 5.932$, $\theta_b = 152.3°$
e. $m_b r_b = 7.448$, $\theta_b = -80.76°$

12-5

a. $m_a r_a = 0.814$, $\theta_a = -175.2°$, $m_b r_b = 5.50$, $\theta_b = 152.1°$
c. $m_a r_a = 7.482$, $\theta_a = -154.4°$, $m_b r_b = 7.993$, $\theta_b = 176.3°$
e. $m_a r_a = 6.254$, $\theta_a = -84.5°$, $m_b r_b = 3.671$, $\theta_b = -73.9°$

12-6 $m_a = 370.7$ g, $\theta_a = -138.6°$, $m_b = 320.2$ g, $\theta_b = 43.5°$

12-7 $m_a = 378.4$ g, $\theta_a = 97.2°$, $m_b = 376.6$ g, $\theta_b = -68.0°$

12-8 These are the same linkages as in Problem 11-5. Open the file P11-05*row*.4br in program FOURBAR to check your solution.* Then use the program to calculate the flywheel data.

12-9 Open the file P12-09.4br in program FOURBAR to check your solution.*

CHAPTER 13 ENGINE DYNAMICS

13-1 Exact solution = – 42 679.272 in/sec @ 299.156° and 200 rad/sec

Fourier series approximation = – 42 703.631in/sec @ 299.156° and 200 rad/sec

Error = –0.0571% (–0.000 571)

13-3 Gas torque = 2 039.5 (approx.), Gas force = 3 141.6

13-5 Gas torque = 2 039.5 (approx.), Gas torque = 2 025.7 (exact)

Error = 0.68% (0.0068)

13-7

a. $m_b = 0.00748$ at $l_b = 7.2$, $m_p = 0.01251$ at $l_p = 4.31$
b. $m_b = 0.00800$ at $l_b = 7.2$, $m_a = 0.01200$ at $l_a = 4.80$
c. $I_{model} = 0.6912$, Error = 11.48% (0.1148)

13-9 $m_{2a} = 0.018$ at $r_a = 3.5$, $I_{model} = 0.2205$, Error = –26.5% (–0.265)

* These files can be found in the PROBLEM SOLUTIONS folder on the CD-ROM included with this text.

TABLE S15-1
Solutions to Problem 15-6

	ω_n	ω_d	c_c
a.	3.42	3.38	8.2
b.	4.68	4.65	19.7
c.	0.26	0.26	15.5
d.	2.36	2.33	21.2
e.	5.18	5.02	29.0
f.	2.04	1.96	49.0

13-11 Open the file P13-11.eng in program ENGINE to check your solution.*

13-14 Open the file P13-14.eng in program ENGINE to check your solution.*

13-19 Open the file P13-19.eng in program ENGINE to check your solution.*

CHAPTER 14 MULTICYLINDER ENGINES

Use program ENGINE to check your solutions.*

CHAPTER 15 CAM DYNAMICS

15-1 to **15-5** Use program DYNACAM to solve these problems. There is not any *one right answer* to these design problems.

15-6 See Table S15-1

* These files can be found in the PROBLEM SOLUTIONS folder on the CD-ROM included with this text.

INDEX

A

acceleration 4, 144, 300
absolute 302, 307, 308
analysis
analytical 308
graphical 303, 304
angular 522, 531, 541
as free vector 308
definition 300
inverted slider-crank 318
cam 352
centripetal 301, 307, 514
coriolis 313
difference
analytic solution 308, 309
definition 303
equation 302
graphical solution 307
in slider-crank 312
discontinuities in 358
human tolerance of 322
linear 522, 531
modified sine 367, 369
modified trapezoidal 364
multiplier factor (cams) 420
normal 307
of a valve train 709
of any point on link 320
of geared fivebar 319
of piston 324
of slip 318
relative 303, 307
peak 418
sinusoidal 362
tangential 301, 307
tolerance 323
accelerometer 322
across variable 504
actuator 28, 517
addendum 435, 440
circle 440
modification coefficients 444
AGMA 440, 444
air
cylinder 28, 77
motor 65
all-wheel-drive 478
Ampere, Andre Marie 5
amplitude ratio 695
analog duplication 416
analogies 11, 685
analogs 504
analysis 10, 11, 76, 77, 521, 721
definition 8
of mechanisms 3, 22
analytical linkage synthesis 78, 80, 188, 189, 199
compare to graphical 196
angle
of a vector
definition 156
of approach 437
of recess 437
angular velocity ratio 258, 261, 434
definition 257
animate (in programs) 738, 745
antiparallelogram 48
linkage 265
apparent position 148
applications
assembly machines 385
automobile engine 345
automobile suspension 107, 262
automobile transmission 435
crank-shaper linkage 103
engine valves 374
indexing table drive 371
movie camera 105
of air motors 65
of fluid power cylinders 65
of hydraulic motors 65
of kinematics 6
of solenoids 66
optical adjusting mechanism 263
steam locomotives 48
toggle linkages 81
approximate
circle arc 126, 128
dwell 130
straight line 103, 120, 128
arc of action 437
arm (epicyclic) 462
Artobolevsky 6
asperities 25

atlas of coupler curves
  fourbar 104, 105
  geared fivebar 111,744
automobile
  clutch 554
  suspension 107, 120, 262
  wheel balancer 590
axis
  of rotation 495
  of slip
    cam-follower 255, 398
    inverted slider-crank 278, 314, 541
    slider block 267, 269, *270*
  of transmission 437
    cam-follower 398
    gear teeth 436
    inverted slider-crank 278, 541
    slider block 267, 269, *270*
axle 262

B

babbitt 635
backdrive 80, 448
background
  research 9, 16, 567, 719
backhoe 7
backlash 438, 440
  definition 438
balance
  complete 570
  dynamic 570, 574
    tires 590, 591
  mass 571
  shafts 658, 676, 678
  single-plane 571
  static 570, 571, 678
    tires 590
balancer
  Lanchester 679
  Nakamura 679
balancing 514
  dynamic 577, 580, 678
  linkages 580
    effect on input torque 585, 586
    effect on pin forces 583
    optimum counterweights 586
    shaking force 579, 580
    shaking moment 586
  single-cylinder engine 631
  static 573
ball
  and socket 25
  joint 25
bank
  angle 661
  engine 643
  of cylinders 600
Barker 49
base circle
  cam 397, 410
  gear 440, 442, 448
  involute 435
  radius 396
base units 17
beam
  cantilever 511
  double cantilever 511
  indeterminate 32
  simply supported 32
bearing 55
  ball 56
  bushing 59
  effective diameter 58
  effective length 58
  flange-mount 56
  journal 55
  linear ball 56
  pillow block 56
  ratio 58, 59
    definition 58
    poor, example of 59
  roller 56
  rolling-element 56
  sleeve 55
  spherical rod end 56
belt 6, 24, 432
  flat 451
  synchronous 451
  timing 451
  vee 433, 450
Berkof-Lowen method 580
big end (conrod) 615
binary 33
  link 24
binomial
  expansion 609
  theorem 608, 613
bisector 128
blank paper syndrome 8, 556
blobs 17, 18
bore/stroke ratio 634
Boston rocker 266
bottom dead center (BDC) 601
boundary
  conditions 345, 352, 378, 383
brainstorming 10
brake 462
branch
  defect 173, 228
  definition 173
brute force and ignorance (BFI) 726
building blocks 28
bump steer 262
Burmester curves 220
bushing 59
  ball 122

C

earn 6, 24, 78, 126, 325, 345, 685
  and follower 77, 125, 254
  automotive valve 509, 699
  axial 349, 422
  barrel 349, 372
  contour 410
  cylindrical 349
  definition 345
  design
    fundamental law of 356
  desmodromic 705
  disk 500, 686
  duplicating machine 417
  dynamic test fixture 415
  face 349
  force-closed 704, 707
  form-closed 704, 705, 707
  geometric generation 413
  ground 424
  hand-dressing 414
  manufacturing 412
  master 416
  materials 412
  mechanisms 503
  milled 424
  plate 349, 708
  plunge cutting 413, 414
  radial 349, 422
  scallops 413, 414
  stationary 406
  three-dimensional 350
  track 704
cam·follower 40, 42, 46, 59
camoid 350

camshaft 704
torque 707
capacitor 504, 506
carburetor 603
carry through 48
cartesian
coordinates 154
form 147
plot 732
Cayley diagram 113, 116
degenerate 113
center
of curvature 409
of gravity 493, 494, 531, 614
global 495
of percussion 498, 615
of rotation 498, 500, 615
point 217
circle 217
centrifugal force 514, 676
centrodes 263
fixed, moving 265
non circular gears 450
centros 249
chain 24
drive 432, 451
silent 451
change points 48
characteristic equation 690, 691
Chasles'theorem 151, 247
Chebyschev 112, 119, 120, 218
chordal action 452
cinematique 5
circle
arc 122
with remote center 103
point 217
circle 217
circuit
defect 173, 228
definition 173
circuits
of a linkage 158, 159
distinguishing 175
number of 173
circular
gears 265
interpolation 416
pitch 440
civil engineering 5
clearance 438, 440
Clerk 603
cycle 601
engine 603
clockworks 5
closed
curve 103
kinematic chains 28
loop 64
mechanism 28
closed-form solution
definition 174
clutch
automobile 554, 623
synchromesh 474
coefficient
of damping 503, 508
of fluctuation 553, 554, 623, 764
of friction 501
cognate 113, 117
fourbar linkage 112
geared fivebar 113
colinearity 80, 98
combined functions
for cams 362, 372
common
normal 255, 436, 437
tangent 255, 435
communication 16, 722
complex
motion 23
conrod 614
coupler 28, 103
definition 24, 149
Whitworth slider-crank 45
number 154
notation 154, 156
plane 154
component
orthogonal 160
compound
epicyclic train 466
gear train 445, 453, 454
compression
ignition 605
stroke 602
computer aided
drafting 77, 105, 556
engineering 77, 78
manufacturing 413
computer graphics 97
computer programs: *See* programs, computer
concave 403, 404
conjugate
action 448
cams 348, 702, 705
conjugates 348, 435
connecting rod 28, 600
conrod 605, 614, 617
two per crank throw 669
conrodlcrank ratio 634
conservation of energy 515
conservative mode 686
constant
acceleration 363
of integration 688
velocity 385
constrained 28
construction angle 98
contact ratio 444
minimum 444
continuation methods 226
continuous 42
motion 385
continuous numerical control (CNC) 413, 414
convex 403
coordinate system 24, 146, 522
absolute 17, 146
global 146, 191, 537, 740
local 146
nonrotating 146, 522, 538, 740
rotating 146, 538, 740
coriolis acceleration 313, 315
correction planes 575, 678
cost 78
coulomb friction 501, 540
counter
balance 54
couple 575
rotating eccentrics 676
shaft 474
weight 573, 585, 633, 678
crankshaft 631
optimum balance 586
coupler 103, 105, 168, 718
as a physical pendulum 586
attachment points
alternate 91
curve equation 227
curves 103, 104, 107, 111, 113, 128
atlas of 105
degenerate 103
degree of 103

design charts 111
double points 104
shapes of 104
symmetrical 107
definition 28
output 83, 85, 89, 91
point 105, 128, 735, 749
crank 105, 600, 614
definition 28
eccentric 58
phase diagram 644, 659, 761
short 58
throw 641
crank-conrod ratio 608
crank-rocker 48, 105
crank-shaper 45
crank-slider
quick-return 102
threebar 525
crankpin 617
splayed 675
crankshaft 603, 641
balance weights 631
mirror symmetric 659
phase angles 763
phase diagram 644
creative process 10, 718
definition 718
creativity 7, 10, 20, 718
critical extreme position (CEP) 346, 351, 353
critical path motion (CPM) 346, 351, 385, 386, 391, 395
crossed
helical gears 447
mechanism 158, 210
crossover shock 422, 438, 704, 706
crowned pulley 451
crunode 104, 111
cubic function
finding roots of 174
current 504
curvilinear translation 117
cusp
on earn 404
on coupler curve 104, 107, 111
on moving centrode 267
cycloid
curve 104
gear tooth 435
geometrically generated 413
cycloidal
coupler curve 267
displacement 359, 362, 375
compared 369
dynamic force 698
dynamic torque 708
single-dwell 382
vibration 418
cylinder
air and hydraulic 65
spacing (IC engines) 762

D

d' Alembert 5, 513, 515, 517, 571, 617, 619
dampers 511, 696
combining 504
in parallel 505
in series 504
damping 502, 503, 509, 685, 689, 699
coefficient 503
critical 690, 691, 692
effective 504, 509
internal 512
nonlinear 502
pseudo-viscous 503
quadratic 502
ratio 690, 695, 699
viscous 502
DC component 609
decision matrix 12
dedendum 440, 442
circle 440
deferred judgment 10
deflection 493, 501
bending 511
torsional 511
degree 103, 111, 378
degree of freedom 22, 27, 32, 506
definition 28
distribution of 38
spatial mechanisms 32
visualizing 27
Dejonge 6
delta
phase angle 644
optimum 644
power stroke angle 654
triplet 37, 38, 42
deltoid 49
Denavit, J. 6, 112
density
mass 493
weight 493
derived unit 17
descriptive geometry 5, 722
design 7, 78, 717
axiomatic 15
by successive analysis 77, 78
case study 718
computer aided 13
definition 7
detailed 12, 13, 14, 18
process 3, 7, 8, 14, 20, 76, 493, 717
qualitative 77
ratios 634
simplicity in 46
specifications 9
trade-off 60, 553, 634
desmodromic 348, 422, 703
determinant 213
diametral pitch 441
Diesel cycle 605
differential 462
automotive 478
center 478
rear 478
definition 477
limited slip 478
Torsen 478
digitizing increment 419
dimensional synthesis 78,80, 82, 132
of a fourbar linkage 82
Dirac delta functions 356
discontinuities 356
discriminant 691
displacement
carn 352, 373
definition 147
total 149
dissipative element 696
Dixon, A. 14
DOF. See degree offreedom
dot product 515
double
crank 48
dwell 130, 353
linkage 128, 352
enveloping wormset 448
harmonic 375, 708

parallelogram linkage 48
rocker 48, 80, 89, 119
drag link 48, 100
dragged crank 100
driver 60
crank 534
stage 89
driving torque 538, 612
duplicate planar linkages 79
dwell 42, 60, 126, 128, 352, 423
earn
double 698
single 375
definition 125
linkages 126
mechanism 42, 125, 130
motion 103
dyad 83, 191, 193, 196, 205, 217
definition 28
driver 87, 89, 91
output 100, 102, 126
DYNACAM program
examples
constant velocity 388
force 699, 700, 705
polynomial 382
radius of curvature 406
single-dwell 374
torque 708, 709
general information 725
how to run 757, 764
dynamic
analysis 18
balancing
devices requiring 575
machine 590
equilibrium 513
force 4, 18, 144, 323, 493
analysis 491, 521
measurement 709
friction 501
models 492
system 4, 514, 522
dynamic equivalence 587
requirements for 614

E

E-Quintet 37
eccentric
earn 413
crank 58
masses 676, 677
eccentricity
cam
definition 398
using to control pressure angle 401
earn-follower
effect on pressure angle 401
flat-faced 402, 411
roller 398
effective
damping 509
linkage 345, 433
links 40, 257
mass 508
spring 508
efficiency 447, 515
definition 470
of a conventional gear train 470
of an epicyclic train 471
elastomers 450
electric motors 60, 548
electrical circuit 504
electromechanical devices 79
endpoint specification 351
energy
kinetic 241
in cam-followers 363, 372, 392
in flywheels 549, 622
in lever ratios 508
in resonance 696
in rotating systems 496
in virtual work 515, 517
peak 370
law of conservation 515
method 515, 545
potential 515, 696
storage 696
elements 696
ENGINE
program 598, 609, 620, 639
flywheel calculations 623
engineering 14
approach 14
design 4, 7, 76, 126
costin 78
definition 7
human factors 16
report 16
engines 60, 600
inline 641
six-cylinder 675
multicylinder 641
opposed 643
flat-four 675
twin 674
radial 643
rotary 643
vee 600, 643, 661
eight 600, 661, 669, 670, 675, 763
six 661, 675
twelve 675
epicyclic gear train
circulating power in 471
efficiency of 473
equation solver 178, 513, 556
equilibrium 502, 513
equivalent
mass 506
spring 508
system 503, 509, 685
Erdman, A. 6, 97, 188, 220
ergonomics 16
Euclidean geometry 82
Euler 5
equivalents 156
identity 155
theorem 150
Eureka! 721
Evans, J. 5
evolute 435
exhaust stroke 603
external
gearset 442
load 531
torque 533

F

face width (gears) 440
Ferguson's paradox 466, 469
film advance mechanism 105
finite
difference method 15
element method 15
firing
angles 763
even 652
inline engines 655
inline four 658, 660, 661
vee eight 673
vee engines 674
order 655, 671, 763
pattern 652
uneven 655
FIVEBAR program

example 52
cognate offourbar 120
coupler curves 112
exact straight line 120
how to run 725
fixed
centrode 263, 266
pivots 90, 93, 105, 112
specified 93
flexure hinge 719
flight simulator 726
fluctuation 553
flywheel 63, 497, 545
calculation
in program DYNACAM 708
in program FOURBAR 549
in program ENGINE 763
designing
for fourbar linkage 548
for 1C engine 622
effect 585
engine 622, 623
in IC engines 675
materials 554
moment of inertia of 623
physical 554
size 763
sizing 553
follower 685
earn 79, 345, 435
aligned 398
force-closed 686, 698
form-closed 702
system 345. 685
underdamped 696
flat-faced 348, 407, 423
float 422
force- or form-closed? 422
Jump 422, 696, 699, 700
mushroom 348
roller 704
rotating 347
slip 704
translating 347
flat-faced 509
roller 708
translating or rotating? 421
velocity 707
foot-pound-second (fps) system 17
force
analysis
dynamic 492, 698
kinetostatic 698, 700. 702, 705
applied 523, 527
centrifugal 514, 515, 619
closed 27
closure 27, 348, 702
crankpin 628, 631
dynamic 598
cam-follower 699, 700. 702, 705, 708
compared to gravitational 516
minimizing 362
external 517, 571
externally applied 523
gravitational 516, 522
impact 699
inertia 506, 517, 557, 571, 610, 617, 629
link 107
main pin 628
piston sidewall 627
primary 660
reaction 534
secondary 660
shaking 544, 570, 598
cancelling 677
fourbar linkage 584
in inline engines 646, 660
in one-cylinder engines 610, 617
in vee engines 667
primary 658
secondary 658
spring 500, 686
transducer 590, 709
transmission 82
wrist pin 628, 631
form-closure 27, 348, 702
four-stroke cycle 601, 655
fourbar linkage 46, 113, 531, 570
acceleration 308
antiparalle10gram 48
change points 48
classification of 49
cognates 116
character of 113
coupler curves 104
crank-rocker 40, 80
double-rocker 80, 83
link1ess 265
mechanism 718
nine independent parameters of 224
optimum straight-line 122
quick-return 98
subchain 83
symmetrical 108
triple-rocker 48, 80
FOURBAR program 81, 111, 521
examples
cognates 116
coupler curve 105
fivebar equivalent 120
quick-return 98
straight-line linkages 120
three-position synthesis 90, 209
toggle 171
two-position synthesis 198
how to run 725
Fourier 5
series 609, 648
free body 514, 526
diagram 522, 531, 619, 626, 686, 689
free choices 84
for function synthesis 223
in three-position
synthesis 204, 205
in two-position
synthesis 192, 193, 196
free vector 248, 307, 308
frequency
forcing 695, 696
fundamental 688, 696, 702
harmonics 688
natural 685
and resonance 696
cam-follower 699, 700, 703, 713
circular 688. 694
undamped 688, 689
vs. forcing frequency 697
ratio 695
response 709
Freudenstein, F. 6, 157
friction 27, 433, 619
belts 433
force 528
in linkages 82
nonlinear 502
torque 758
work 267
frisbee 248
frustration 10, 11, 720
full joint 25,29
function
forcing 694, 713
generation 78, 351
analytical synthesis 220
definition 79, 188
table of free choices 223
two-position 83

generator 78, 221, 345
functional visualization 9
fundamental frequency 609
fundamental law
of carn design 359, 698
of gearing 434, 436, 438
definition 436
fuzzy logic 226, 228

G

gas
force 605, 610, 620, 629, 652, 759
curve *605, 610*
pressure 610, 759
curve *603, 605, 610*
torque 610, 613, 652, 759
gate 105
Gauss-Jordan elimination 200
gear
antibacklash 439
base pitch 444
bevel 449
spiral 449
straight 449
blank 449
helical 447
herringbone 447
hypoid 450
idler 453, 744
rack 449
ratio 112, 164, 506, 744
set 119, 265
shaper 442
spur 447
teeth 435
full-depth 442
minimum number 442
unequal addendum 444
tooth action 432
train 432, 452
compound 454
design algorithm 458
earliest known reference 432
epicyclic 461, 462, 465, 475
error in center distance 438
irrational ratio 461
reverted 456, 474
simple 452
worm 448
wormset 448
gearbox 432, 455
geared tivebar
coupler curves 111
mechanism 52, 164
analysis 164, 319
cognate offourbar 119
coupler curves *103*
inversions of *53*
program for 744
gearing
fundamental law of 434
definition 436
gears 24, 434
noncircular 265, 450
profile-shifted 444
gearset 434, 448
angle of approach 437
angle of recess 437
arc of action 437
changing center distance 438
contact ratio 444, 446
external 435
highest point of single-tooth contact 444
internal 435, 442
length of action 436, 444
pressure angle 437
genetic algorithms 226
Geneva
mechanism 42
wheel 42
global mass center 580
goal statement 9,567
graphical
dimensional synthesis 78
compare to analytical 196
tools needed for 83, 89
position analysis 145
Grashof 47, 144
condition 46, 47, 49, 89
geared fivebar 53
crank-rocker 120
double-rocker 170
fivebar 119
linkage 60
special case 48
gravitational
constant 17, 18
system 17
gravity 323
ground
definition 28
pivots 95
plane 112
Gruebler 29
criterion 38
equation 29, 32, 33, 40

H

Hachette 5
Hain, K. 6
half
angle identities 158
cycloid 393, 394, 395
joint 27, 33
period harmonic 393
Hall, A. S. 6, 97, 98, 119
Hammond, T. 111
harmonic 375
number 675
harmonics 609, 648, 688
Hartenberg, R. 6, 112
helical motion 25
helix angle 25, 447, 448
higher pair 6, 25, 27
Hitchcock chair 266
hob (gear) 442
hodograph 732
Hoeken linkage 120, 122
homogeneous 688
ODE 688
solution 689
homotopy methods 226
hood hinge 79
Hrones and Nelson atlas 104
human factors engineering 15, 21
hunting 439
hydraulic
cylinder 77
motor 60, 65
hyperboloids 450
hypoid gears 450

I

idea generation 10
ideation 9, 11, 14, 720
and invention 9
identification of need 8
identity matrix 200
imaginary axis 154

imbalance 590
inch-pound-second (ips) 17
inclined plane 5
incubation 11, 720
indexers 372
indexing 125
  table 371
indices of merit 261
induction system 602
inductor 504, 505
inertia
  balance 658
    vee engine 661, 674
  force 513, 514, 571, 619, 643, 652
  torque 513, 517, 620, 649
inertial reference frame 146
infinity of solutions 196, 217
inflection points 383, 406
initial conditions 688
inner ear 322
input torque 548, 585
instant centers 249
  earn-follower 254, 400
  fourbar linkage 250, 263, 718
  generate centrodes 265
  permanent 249, 250
  slider-crank 252
  using in linkage design 261
intake stroke 602
interference 442
intermittent motion 42, 385
internal combustion
    engine 538, 598, 639
invention 7, 10
inverse dynamics 492, 521, 698
inversion
  definition 44
  for three-position
    synthesis 93, 95, 97
  in ideation 11
  of slider-crank 102
    force analysis 541
    position solution 162
inversions
  distinct 45
  of fourbar linkage 47
  of sixbar linkages 44
involute 435, 438, 442, 448
  definition 435
  teeth 438
isomer 38, 746
  invalid 38
  number of valid isomers 38
iteration 8, 11, 13, 77, 82, 84, 386, 493, 556

J

jacobian 176, 177
jerk 324, 374
  angular 325, 326
  earn 352
  difference 327
  finite 696, 698
  linear 327
jitter 128
joint 6, 25
  earn-follower 56
  cantilevered 57
  force-closed 27
  force index 169, 555
  form-closed 27
  multiple 30, 33
  one-freedom 25
  order 27
  slider 25
  sliding 250
  straddle mounted 58
  two-freedom 25
joystick 25

K

Kant 5
Kaufman, R. 97, 188
Kennedy, Alexander 6
Kennedy's rule 249, 250
Kimball, B. 726
kinematic
  applications 6
  chain 27
    class of 47, 53, 54
    definition 27
    inversion of 47
  pair 6, 25
  structure 30, 32
  synthesis 521
kinematics 3, 4, 5, 491, 685, 699, 709
  definition 3
  history of 5, 20
kinetics 3, 5, 491
kinetostatics 492, 521, 698, 706
Kinsyn 97
KISS 15
Koster 503, 696, 698, 699, 713
Kota, S. 109
Kutzbach 29

L

Lagrange 5
Lanchester balancer 679
L'Ecole Polytechnic 5
length of action 436, 444
Levai
  12 basic epicyclic trains 463
lever 5
  ratio 506, 511
limit stops 107
Lincages 78, 97, 220
line
  contact 25
  of action 437
  of centers 105
linear
  acceleration 300, 323
  actuator 65, 66
  algebra 199
  ball bearings 56
  Geneva mechanism 44
  graph 249
  interpolation 414, 419
  jerk 325
  motion 65
  velocity 241
link 6, 23, 24, 38
  dogbone 587
  output 144
  ratio 105, 111
  shrinkage
    complete 40, 42
    partial 40
linkage 78
  advantages 59, 60
  assemblability 54
  basic building blocks 24, 53
  compliant 263
  design 24
  disadvantages 60
  inline 586
  linkless 266
  non-quick-return 98
  rotatability 46

self-locking 81, 91
sixbar 167
Stephenson's 167
Watt's 167
synthesis 78, 80, 112
torque 82, 90
transformation 33, 40, 345
linkages 6, 24
connected in parallel 53
connected in series 53
versus cams 59
linkless fourbar linkage 267
load
lines 61
torque 61
load sharing 444
locomotive 48
Loerch 188, 211
log roller 5
losses 516, 696
lower pair 6,25
lubricant 25
lubrication 55, 60, 424, 603
hydrodynamic 55
problems 56
seals for 55
lumped
mass 576,616
model 508, 617, 685
parameter 506, 511

M

machine 4, 5, 27, 144
definition 4, 27
design 3, 5, 18, 59, 76, 325
machinery
rotating 497
mandrel 590
mass 4, 18, 492, 500, 614, 686, 696, 699
balance 572
density 493
effective 508, 509, 699, 708
equivalent 614
lumped 509, 615
moment 493, 494, 580
moment of
inertia 495, 522, 550, 585, 614
point 492, 498, 571
mass-radius product 573, 578, 591, 633
mass-spring model 686
masses
combining 506
massless rod 498, 571
materials 635
Mathcad 178, 556, 400
Matlab 400
matrix
augmented 200, 205, 213
coefficient 205
inverse 200
solution 199, 513
solver 199, 513
MATRIX program
example
force analysis 529, 531, 534
linkage synthesis 209
force analysis 513
how to use 201
May, Rollo 718
mechanical
advantage 260, 261, 435
analog computer 78
circuit 504
efficiency 260
engineering 5
function generator 78
system 504
mechanism 4, 5, 27, 32, 144
crank-shaper 103
definition 4, 27
double-dwell 130
forces in 491
non-quick-return 98
optical adjusting 263
planar 79
quick-return 97
Whitworth 103
microcomputer 13, 78
Milton, J. 432
mirror symmetric 659, 675
mks system 18
mobility 28. *See also* degree of freedom
model 13, 206, 495, 503
cardboard 13, 81, 85
dynamic 498
dynamically equivalent 614
finite element 600
lumped mass 617
lumped parameter 686
simplified 492
single *DOF* 512
statically equivalent 616
value of 617
modified
sine 367, 372, 394, 418, 698
trapezoid 367, 369, 418
module 441
modulus
of elasticity 509
of rupture 511
moment
primary 658
secondary 658, 660
shaking 570, 598, 677
in inline engines 650, 652
in vee engines 667
momentum 492, 603
Monge, Gaspard 5
motion
complex
definition 149
generation 89, 189
analytical synthesis 193
definition 79
three-position 89, 91
two-position 85
intermittent 65
parallel 117
simple harmonic 357, 358
straight line 77
motor 28, 60, 517
AC 60
closed loop 64
compound-wound 61, 62
DC 60
permanent magnet (PM) 61
speed controlled 63
gearmotor 60, 64
open loop 65
permanent magnet 61
series-wound 62
servo 60
shunt-wound 62
speed torque characteristic 548
stepper 60, 65, 79
synchronous 63
universal 60
movie camera 105
moving
centro de 265, 266
pivots 90, 95, 128
multiple solutions 15

N

Nakamura balancer 679
natural frequency 679, 688, 709
  circular 688
  damped 688, 691
  undamped 688, 691
Nelson, G. L. 104
Newton-Raphson
    method 168, 174, 327
  chaotic behavior of 175
  in equation solvers 178
Newton's
  equation 17, 686
  laws 323, 491, 521, 571
  method 174,521
  second law 3
  third law 527
no-load speeds 64
node 24, 28, 38
noise, vibration, and harshness
    (NVH) 679
non-Grashof 47
  double-rocker 170
number synthesis 33
numerical control (NC) 413
nut 25

O

objective function 224
octoid 449
offset (in slider-crank) 159
oil bath 424
open
  kinematic chain 28
  mechanism 158, 210
operator 154
order
  defect 228
  of joints 27
  of links 33
  of polynomial 378
orthogonal 160
oscillation - earn-follower 696
Otto cycle 601
overbalanced crank 633
overdamped system 691
overlays 77
overshoot of response 692
oversquare engine 634
overturning moment 402

P

pairs 25
  higher 25
  lower 25
paradoxes
  Ferguson's 468
  Gruebler's 37
parallel
  axis theorem 497, 557
  connections
    dampers 504
    springs 504
  linkage planes 79
  motion 117
parallelogram linkage 48, 49
particular solution 688, 694
path 79
  generation 79
    definition 79
    precision points 189
    with coupler curve 103, 105, 107, 112
    with prescribed timing 79, 220
pawl
  driving 44
  locking 44
Peaucellier 122
performance specifications 9, 14, 567, 719
phase angle
  crankshaft 641, 763
  geared fivebar 111, 164, 744
  optimum 641
  sign convention 644
physical pendulum 586
piecewise continuous function 359
piezoelectric
  accelerometer 709
  force transducer 590
pin
  double shear 58
  forces 610, 623
    crankpin 626
    main pin 628
    wrist pin 626
  joint 25, 55
  single shear 58
pinion 434, 449
piston 324, 539, 600, 614, 617
  acceleration 606, 610, 619
  engine 45
  position 606
  pump 45, 538, 601, 639
  velocity 606
pitch
  circle 435, 438, 440
  curve 397, 404, 406
  diameters 435, 438
  diametral 441
  point 435, 436
planet gear 462
platform rocker 266
polar
  coordinates 154
  form 147
  plot 660, 732
poles 249
polodes 265
polynomial 708
  3-4-5 378, 381, 382, 698
  4-5-6-7 381, 382, 418
  function 356, 378
    design rule 383
position 144, 147, 241
  absolute 149
  analysis 151, 152
  difference 148
    equation 147, 243
  of any point on a link 168
  relative 148
  vector 147, 153
pounds force (lbf) 18
pounds mass (Ibm) 17
power 61, 259, 504, 516, 653, 706
  chart 761, 763
  equation 517
  stroke 603, 655, 659
    angles 653, 655, 763
  to weight ratio 601
practical
    considerations 554, 556, 713
precision
  points 189, 196
  position 189, 191, 201
preload
  earn-follower spring 699
preloaded structure 32
pressure angle
  earn-follower 396
    flat-faced 437

force analysis 708
roller 397. 398
of gearsets 437
primary component
of shaking force 609
of shaking moment 652
prime
circle 397, 708
radius 396, 405
principal axes 23
principle
of d' A1embert 513
of transmissibility 258
problem
definition 719
unstructured 8
problem sets
Chapter 2 67
Chapter 3 132
Chapter 4 178
Chapter 5 232
Chapter 6 281
Chapter 7 327
Chapter 8 425
Chapter 9 479
Chapter 10 518
Chapter 11 557
Chapter 12 592
Chapter 13 635
Chapter 14 682
Chapter 15 714
production 13
programs, computer
coordinate systems in 732, 740
copying to clipboard 729
creating new files 729
disclaimer on liability 726
DYNACAM 751
continuity check 754
drawing the cam 755
follower dynamics 756
input data 751
polynomial functions 753
sizing the cam 754
ENGINE 757
charts 762
crank balancing 760
flywheel calculations 763
multi cylinder 761
single cylinder 758
examples in 729
FIVEBAR 743
animation 745
coupler point 744
dynamics 745
input data 744
phase angle defined 744
FOURBAR 735
balancing in 740
centrodes 739
cognates 743
input data 735
synthesis 743
general information 725
home screen 728
how to run them 735
linkage
angle steps 736
animation 738
autoscaling 739
calculation errors 738
calculation in 736
dynamics 740
Grashof condition 738
one position 736
time steps 737
trace on/off 739
MATRIX 764
opening a file 729
operation 727, 743
plotting data 731
cartesian plots 732
polar plots 732
printing from 730
quitting 734
running 728
saving data 729
SIXBAR 745
animation 748
dynamics 748
input data 746
SLIDER 749
animation 751
calculation 750
dynamics 751
input data 749
support 735
units 729
user actions possible 728
projects
Chapter 3 140
Chapter 8 429
Chapter 11 567
Chapter 13 638
Chapter 14 683
prototypes 13, 511
prototyping 12
and testing 13
pulleys 450
pure
harmonic 553, 652, 689
rolling 27, 104, 498, 570
joint 27
rotation 24, 85, 241, 614, 617
slide 27
translation 24, 312, 498, 614, 617
pushrod 509

Q

quasi-static 513
quaternary link 24, 33
quick
forward 98
return 98, 102, 105
mechanism 45
sixbar 100

R

rack 449
and pinion 449
steering 449
radius
of curvature 396
flat follower 407
roller follower 403, 405
of gyration 498, 500
prime circle 700
ratchet 6
and pawl 44
wheel 44
ratio
gear 506
lever 508
reference frame 28
relative
acceleration. *See* acceleration: relative
velocity. *See* velocity: relative
report, technical 16
resistor 504
resonance 696
earn-follower
force-closed 696
form-closed 703
resonate 695
response
complete 695
damped 689
forced 695

steady state 695
transient 688, 692, 695
undamped 686
Reuleaux, Franz **6, 25, 28**
classification of mechanisms 27
reverted
compound train 456
gear train design 456
revolvability **54**
definition 54
right angle drives **449**
rigid body **23,24**
acceleration 308
motion 149
ring gear **462**
rise-dwell-fall-dwell cam **346, 351**
rise-fall cam **346, 351**
rise-fall-dwell cam **346, 351, 374**
Roberts
-Chebyschev theorem 112
diagram 113
straight -line linkage 120
Roberts, Richard **120**
Roberts, Samuel **112, 120**
robot **28,77**
rocker
arm 509, 511
definition 28
infinitely long 40
output 83
rocking
chair 266
couple 575
roll-slide joint **25,27**
roller **348**
chain 451
follower 348, 405, 423, 500, 686
chrome plated 423
crowned 423
in valve trains 423
materials 423
slip 422
rolling
centrodes 450
cones 449
contact 6
cylinders 433, 435
root finding **327**
rotatability **46,53**
definition 53
of geared fivebar linkage 53
of N-bar linkages 53
rotation **23**
definition 149
pure 24
balance in 570
rotational
DOF 25
freedom 27
kinetic energy 601
rotopole **85**
roughness, surface **419**

S

***s v a j* diagrams** **352**
polynomials 378
Sanders **327**
Sandor, G. N. **6, 97, 188**
scalar magnitude **256**
scaling **13**
Scotch yoke **40,44**
screw 6
joint 25
second
harmonic 609
moment
of area 511
of mass 495
secondary component
of shaking force 609
of shaking moment 652
selection **12**
series connections
dampers 504
springs 504
servo
mechanisms 439
motor 64, 79
valve 65
shaft
encoder 590
hollow 462
sheave **450**
shock **324**
SI system **17**
simple harmonic motion **394**
simultaneous equation solution **199**
dynamic forces 512, 522
single
cylinder engine 600
dwell 130, 374, 382
mechanism 124. 126
enveloping wormset 448
gearset 453
sixbar
drag-link quick-return 100
linkage 113
mechanism 126
Watts linkage 89
SIXBAR program **725**
differences from FOURBAR 746
example 53
double-dwell 130, 352
quick-return 102
single-dwell 128
three-position synthesis 93, 211
two-position synthesis 89
skew axis **23**
slider block **40, 539**
slider-crank **40, 45, 60, 103, 250, 538, 541**
analysis
acceleration 311
Fourier 605
instant centers 252
position solution 159
vector loop 159
inverted 161, 316, 541
acceleration 315
linkage
dynamic model 617
in IC *engines* 598
multicylinder 639
offset 161
one-cylinder 600
nonoffset 605
offset
definition 159
sliding
contact 6
joints 33
slip **104**
component 269, 270, 314
velocity 313
slop **439**
slugs **17, 18**
solenoid **28, 66, 77**
solids modelling **556**
solution methods **512**
Soni, A. **117**
space width (gears) **438, 440**
spatial
linkage 107
mechanisms 27, 79

specified fixed pivots 93, 95, 211
spreadsheet 513
spring
  compression 510, 511
  constant 55, 500, 509, 511, 686, 700, 704
    definition 501
    effective 506, 508, 698, 704
  free length 699
  helical coil 699
  physical 698, 704
  preload 700
springs 107, 505
  as links 54
  combining 505
  in parallel 506
  in series 505
sprocket 451
standard form equation 220, 222
static
  equivalence 617
  friction 501
stationary configuration 80
steady state 688
Stephenson's
  chain 38, 40
  sixbar 45, 53, 167, 746, 747
stepper motor 60, 65, 69
stiction 501
stiffness 493, 696
stops 44, 372
straight-line
  linkage 5, 77
    optimum 122
  mechanisms 120
    approximate 122
    exact 120
strain gages 709
strength 493
stresses 4, 144, 323, 493
structural
  building block 37
  subchain 38
structure 30, 32
  preloaded 32
Suh, N. P. 15
sun gear 462
superposition 512, 513, 610, 623
surface contact 25
suspension system 262
sweet spot 498
synchromesh 448, 474
  clutch 474
  transmission 474
synonyms 11
synthesis 76, 77, 80, 83
  algorithm 78
  analytical 78, 82
    compare to graphical 196
    elastic energy method 229
    equation 224
    equation methods 227
    optimization methods 227
    optimized 224
    precision 224
    precision point methods 226
    selective precision synthesis 228
    using genetic algorithms 229
  definition 8
  four-position
    analytical 220
    graphical 97
  graphical
    tools needed for 83
  of mechanisms 3, 18, 22
  qualitative 76, 77, 78, 84
  quantitative 78, 97
  three position
    analytical 201, 205, 208
    graphical 89
    motion 201
    specified fixed pivots 211, 214
  two position 83
    analytical 197
    graphical 89
  type 78

T

tabular method 465
tackle 6
tappet 509
ternary link 24, 33, 34
testing 12, 13
thermodynamics 598, 605
three-freedom joint 25
threebar crank-slide 525
through variable 504
time ratio 98, 100, 102
timing diagram 353
Ting, K. L. 53
TKSolver 178, 327, 400, 556
toggle 80, 81, 265, 737
  angle 172
  linkage 81
  position 80, 91, 113, 189, 19(
    calculating location 170
    in rock crusher 261
tolerance 414
  (human) of acceleration 323
tooth thickness 438, 440
toothed belts 451
top dead center (TDC) 601
torque 585
  about the mass center 495
  applied 523
  camshaft 706, 708
  converter 475
  driving 517
  dynamic 708
  external 517
  flywheel-smoothed 623
  gas 613
    flywheel smoothing 622
    in four-cylinder inline engine 655, 660
    in one-cylinder engine 610
    in vee engines 669
  inertia 610
    flywheel smoothing 622
    in four-cylinder inline engine 658, 660
    in inline engines 649
    in one-cylinder engine 621
    in vee engines 668
    in virtu61 work 517
  input 55, 706, 707
  oscillations in 707
  ratio 260, 435
  shaking 544, 610
    in fourbar linkage 586
    in multicylinder engines 652
    in one-cylinder engines 620
  source 523, 528, 534, 557
  total 660, 673, 763
    engine 622
  variation 548
torque-speed relation 61
torque-time
  diagram 551
  function 622
Towfigh, K. 263, 717, 718
trade-offs 78, 126, 374, 703
train ratio 453

transfer
port 603
theorem 497
transient 688
analysis 737
translating
follower 347
slider 100
translation 23,24
curvilinear 117, 149
definition 149
rectilinear 149, 348
translational *DOF* 25
transmission 435, 448, 601
automatic 468
automotive 474
component 269, 270, 314
crashbox 477
Ford model T 476
synchromesh 474
transmission angle 257, 258, 261, 503, 554
definition 81, 169
differences in cognates 113
extreme values 169
limited application 169
minimum 82
optimal 102
poor 196
quick-return linkage 100
trapezoidal
acceleration 363
rule 552
triple-rocker 48, 170
truss 38
twobar chain 83, 100
two-dimensional space 23
two-freedom joint 25
two-plane balance 574
two-stroke
cycle 601, 603, 653
engine 654
type synthesis 77, 131

U

undercutting 404, 407, 442
underdamped 692, 693
undersquare engine 634
unit vectors 154
units systems 16
unobtainium 614, 698
unstructured problem 8

V

valve 509
earn 422, 434
float 699
spring 509
valves 345
vector
angle of
definition 156
free 248, 307, 308
loop 191
vee
angle 643, 661, 674
belt 450
velocity 144, 241
absolute 242, 247, 248
analysis
algebraic 271
geared fivebar 278
graphical 244, 246
inverted slider-crank 270
sliding joint 268
using instant centers 256
angular 241, 270, 277, 315
earn 352
constant 120
definition 241
difference 243, 247, 248, 272, 302
equation 243
of point on link 279
of slip 267, 277, 315
of transmission 278
ratio 435, 442, 450
of involute gears 438
relati ve 243, 247, 267, 272, 501
vibration
in cam-followers 396, 503, 694, 704
in engines 652
in linkages 544
residual 698
virtual work 515, 517, 545
equation 517
ViseGrip 261
visualization 721, 722
voltage 504

W

Watt, James 5
Watt's
chain 38, 53
linkage 746
sixbar 40, 45, 83, 167, 746
straight-line fourbar 120
wear 25
weather systems 315
wedge 5
weight 17
factor 12
well pump 45
wheel 6
and axle 5
Whitworth quick-return 45, 103
Willis, Robert 5
windshield wiper linkage 49
Wood, George A. Jr. 717
work 28, 515
Working Model 77, 81, 105, 725
worm 448
set 448
wheel 448
wrapping connectors 6
wrist pin 615, 617
writing engineering reports 21

Y

Young's modulus 509, 511

Z

zero velocity 104
Zhang, C. 111, 744